Combination equipment Miffy

UKPE034.12H

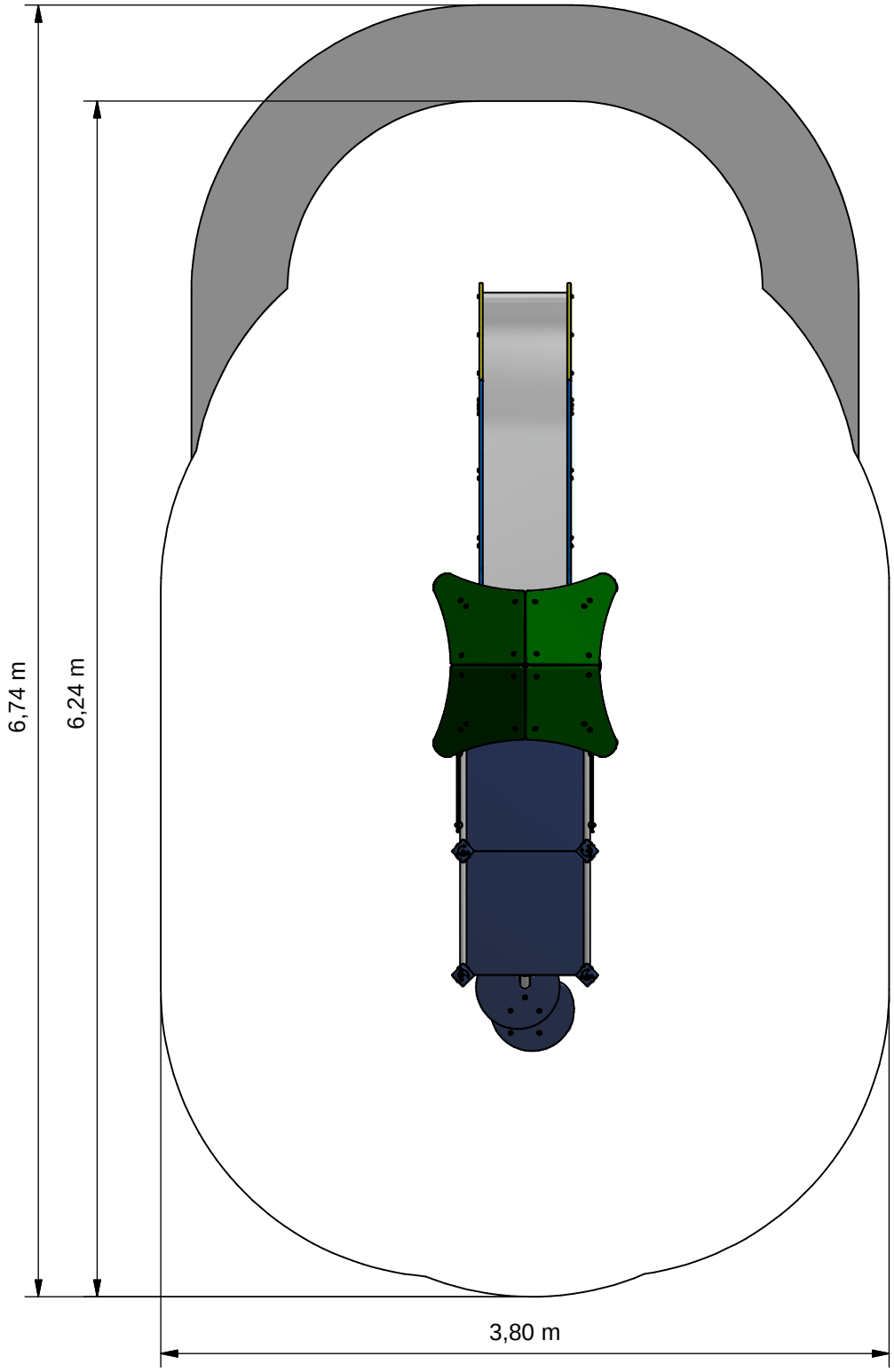

Opvangzone
Impact area
Obstakelvrije zone
Obstacle free zone

BOER SPEELTOESTELLEN

Benaming *Title*	Ukkepuk Nijntje
Opmerking *Comment*	Hardhout
Datum *Date*	2-11-2011

Tekening *Drawing*

TOE UKP 034 12H

Obstakelvrije zone *Obstacle free zone*

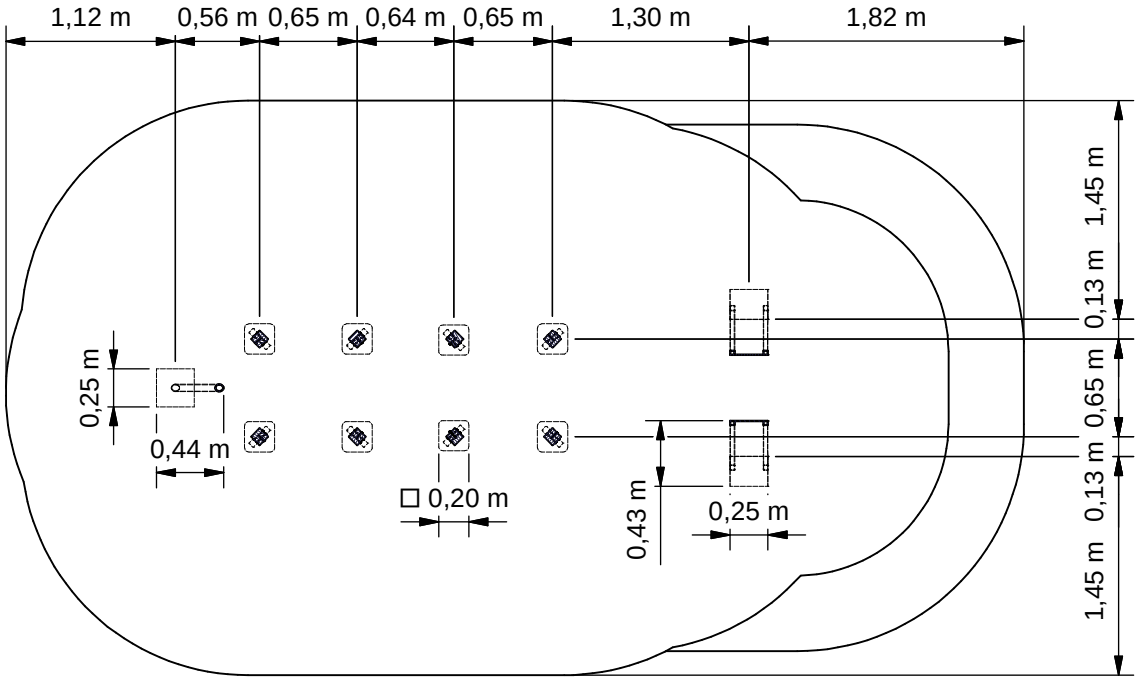

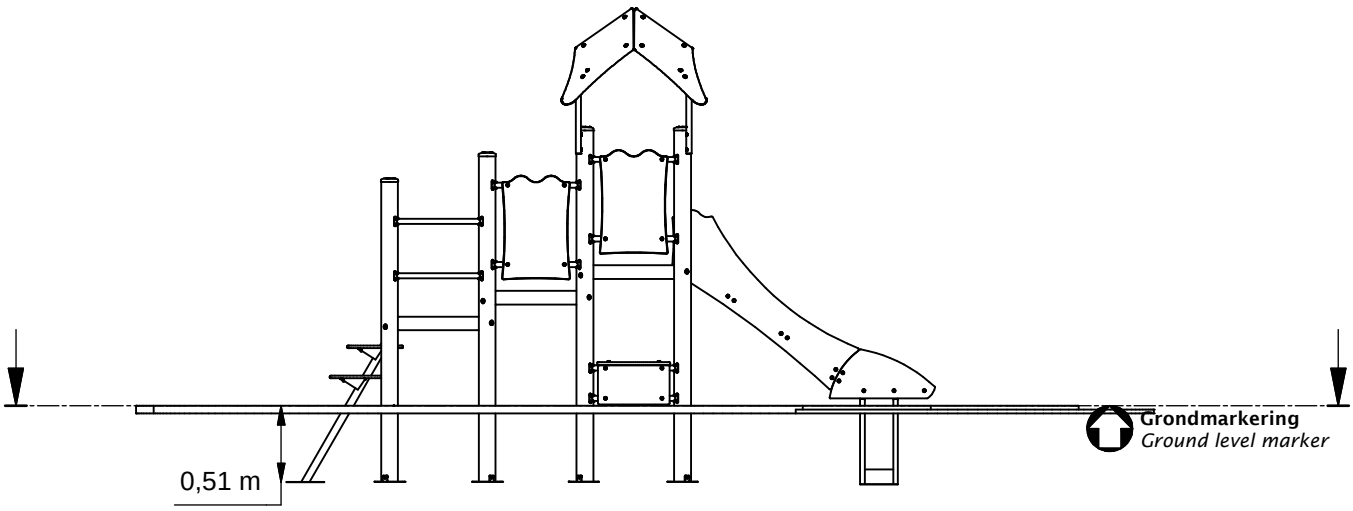

BOER SPEELTOESTELLEN

Benaming *Title*	Ukkepuk Nijntje
Opmerking *Comment*	Hardhout
Datum *Date*	2-11-2011

Tekening *Drawing*

TOE UKP 034 12H

Bodemplan *Groundplan*

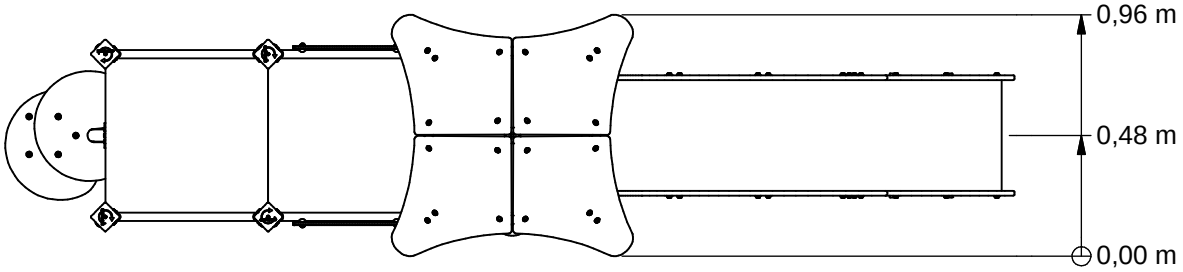

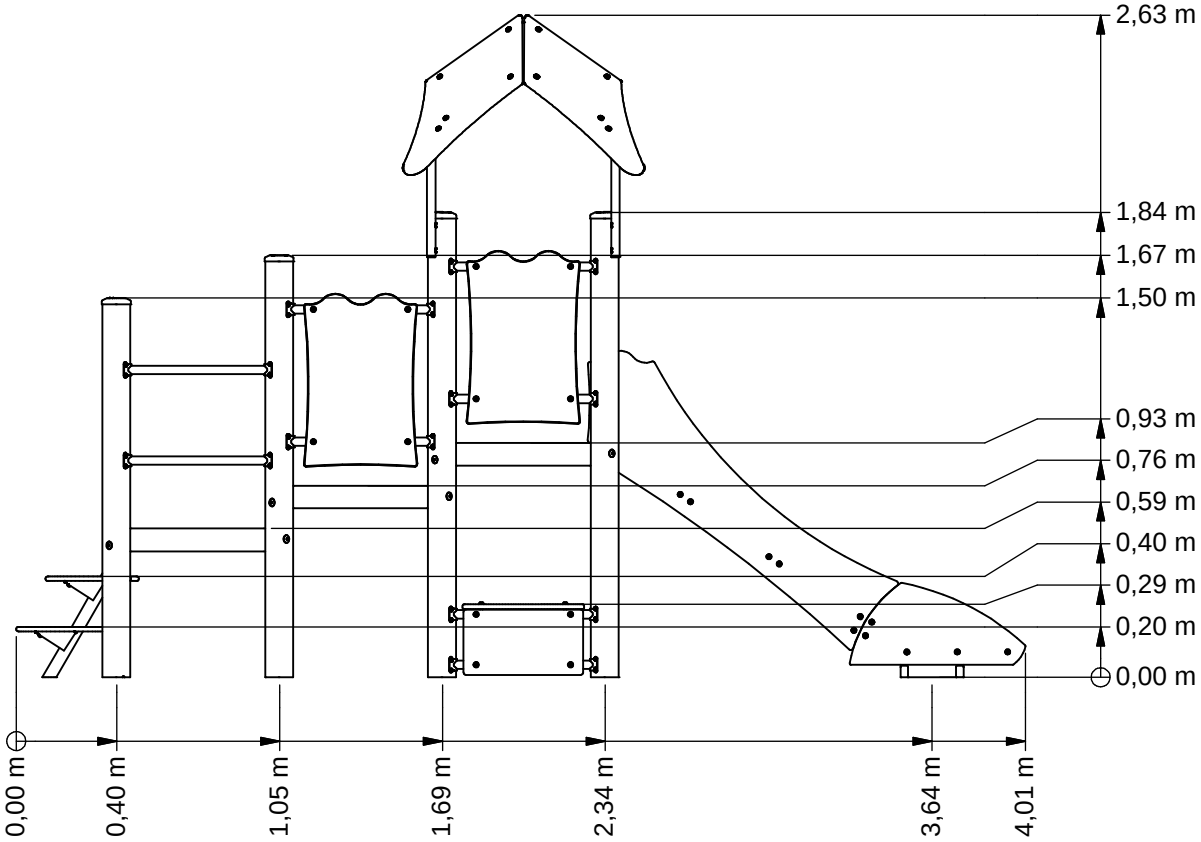

BOER SPEELTOESTELLEN

Benaming *Title*	Ukkepuk Nijntje
Opmerking *Comment*	Hardhout
Datum *Date*	2-11-2011

Tekening *Drawing*

TOE UKP 034 12H

Afmetingen *Dimensions*

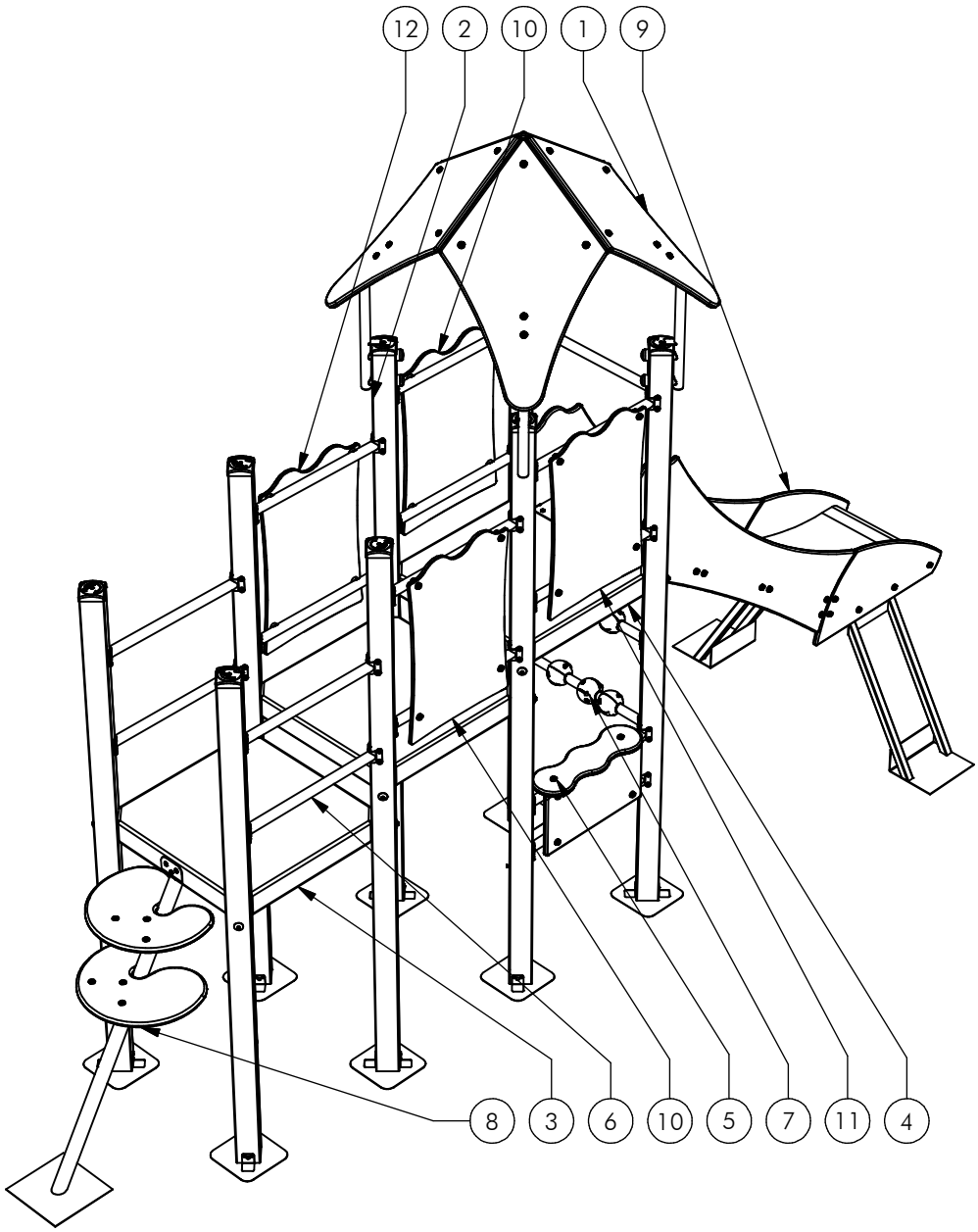

Nr	#	Type	Progr.	Volgnr	Bew.	Rev.	Benaming	Opmerking
1	1	MOD	UKP	HHT	103	A	DAK	UKKEPUK
2	1	MOD	UKP	HHT	105		TOREN TUSSENSTAP	UKKEPUK
3	1	MOD	UKP	HHT	107		HALF TOREN LAAG	UKKEPUK
4	1	MOD	UKP	HHT	108		HALF TOREN HOOG	UKKEPUK
5	1	MOD	UKP	HHT	121	A	Toonbank	Ukkepuk
6	2	MOD	UKP	HHT	131		SYSTEEMBUIS DUBBEL	UKKEPUK
7	1	MOD	UKP	HHT	135		TELBOL DUBBEL	UKKEPUK
8	1	MOD	UKP	HHT	168		Boormtrap	Ukkepuk
9	1	MOD	UKP	HHT	178	A	Glijbaan	93cm Vloer
10	2	MOD	UKP	HHT	204		Wandje Nijntje oranje	Ukkepuk
11	1	MOD	UKP	HHT	205		Wandje Nijntje geel	Ukkepuk
12	1	MOD	UKP	HHT	206		Wandje Nijntje blauw	Ukkepuk

BOER SPEELTOESTELLEN

Benaming *Title* Ukkepuk Nijntje

Opmerking *Comment* Hardhout

Datum *Date* 2-11-2011

Tekening *Drawing* TOE UKP 034 12H

Modules *Modules*

UKPE034.12H

Combination equipment Miffy

LOGBOOK

(Onderstaand logboek kan gebruikt worden om te voldoen aan de eisen, gesteld in artikel 14 van het Warenwetbesluit Attractie- en Speeltoestellen)

Type indication	Miffy
Product code	UKPE034.12H
Name of equipment	Klimklautertoestel Nijntje
Maximum height of fall	1,0 m
Year of construction	2017
Certificate	09200116218
inspection authority	Liftinstituut B.V. Buikslotermeerplein 381, A'dam - 1025 XE Amsterdam
Name manufacturer	BOERplay Hyacintstraat 2 - 4255 HX Nieuwendijk Phone: +31 (0)183 40 23 66 Fax: +31 (0)183 40 35 64
name installer	_____
	_____
Description of equipment	Combination equipment Miffy
Location of equipment	_____

Data about the owner of the play equipment

Name:	_____
Address:	_____
Postcode and town:	_____
Contact person:	_____
Telephone number:	_____

Data about the administrator of the play equipment

Name:	_____
Address:	_____
Postcode and town:	_____
Contact person:	_____
Telephone number:	_____

LOGBOOK

Inspection and maintenance intervals

Nr.	Inspection	Maintenance	months between inspections
1	Verify equipment's stability, junctions and missing parts. Inspect bolts, screws and nuts for absence, jams, corrosion and wear.	Add missing parts, secure joints, apply missing fixing agent and replace corroded parts.	1
2	Check suspension for wear.	Replace worn parts and/or remove non-functioning parts.	1
3	Inspect rotating parts such as hinges, rolling-element bearings, etc. for wear and acceptability.	Replace worn parts and/or remove non-functioning parts.	1
4	Check wood for splinters, unacceptable damage and signs of rot. Especially at ground level.	Repair damage. Replace affected wood. Smoothen splintered wood and sharp edges.	1
5	Inspect foundation for stability, tearing and coverage.	Restore foundation and covering material.	3
6	Examine rubber and synthetic parts for wear, damage and break.	Replace original parts.	3
7	Inspect metal for corrosion and damage in the coating.	Restore any damaged coating (after removing rust and applying primer).	6
8	Check ropes, cables, chains and nets for wear and damage. Steel cables and nets which are tensioned must be checked for tension.	Replace parts where necessary. Steel cables and nets must be tensioned.	3
9	Inspect equipment for unsafe changes and additions.	Remove unsafe additions and correct unsafe changes.	1
10	Inspect safety surfaces.	Restore and repair where necessary.	1

Remarks

1. If used intensively, all points require extra attention.
2. Extreme weather conditions and locations may require a higher inspection frequency. Discuss this with the supplier.
3. Vandalism-sensitive locations require stricter inspections, possibly daily.
4. Check the terrain regularly for items that do not belong there, are unsafe or may be used wrongly. Examples are poisonous plants, glass shards, etc. Frequency depends on strain.
5. Remember that bad maintenance leads to unsafe conditions and notably faster impoverishment of the playground area.
6. Replacement parts can be ordered at the manufacturer with the part numbers on the module drawing. Drawings can be found in de user guide.
7. The impact area shall be provided with impact attenuating surface according to the specified falling height.
8. This list is conform the CEN-standard "playground equipment and surfacing NEN-EN 1176-7".

LIFTINSTITUUT

PRODUCTS
RvA C 067

TYPE-EXAMINATION CERTIFICATE

Acting under the " Warenwetbesluit Attractie- en Speeltoestellen" issued by Liftinstituut B.V. commissioned by departmental order, no. VGP/PSL 2857566 from 27 Juni 2008.

Certificate nr.	: NL 09-2001-162-18	Revision nr.: 200116218
Description of the product	: Playground equipment, Ukkepuk	
Trademark, type	: Speelwijzer, UKP.....	
Name and address of the manufacturer	: Speelwijzer Nijverheidsstraat 8 5317 NL Nederhemert Noord	
Name and address of the certificate holder	: Speelwijzer Nijverheidsstraat 8 5317 NL Nederhemert Noord	
Certificate issued on the basis of the following requirements	: Warenwetbesluit Attractie- en Speeltoestellen	
Test laboratory	: None	
Date and number of the laboratory report	: None	
Date of type-examination	: 01-09-2001 t/m 03-09-2001, 21-02-2009	
Annexes with this certificate	: Report belonging to the type-examination certificate nr.: NL 09-2001-162-18	
Additional remarks	: This certificate supersedes type certificate dated April 27th 2005, with certificate number NL 09-2001-162-18	
Conclusion	: The playground equipment meets the requirements of the above specified European standard(s) and "Warenwetbesluit Attractie- en Speeltoestellen" taking into account any additional remarks mentioned above.	

Issued in Amsterdam

Date of issue : April 7th, 2009

Ir. V.M.A. Barendregt
Senior Officer Certification & Technology
Liftinstituut B.V.

CERT05P

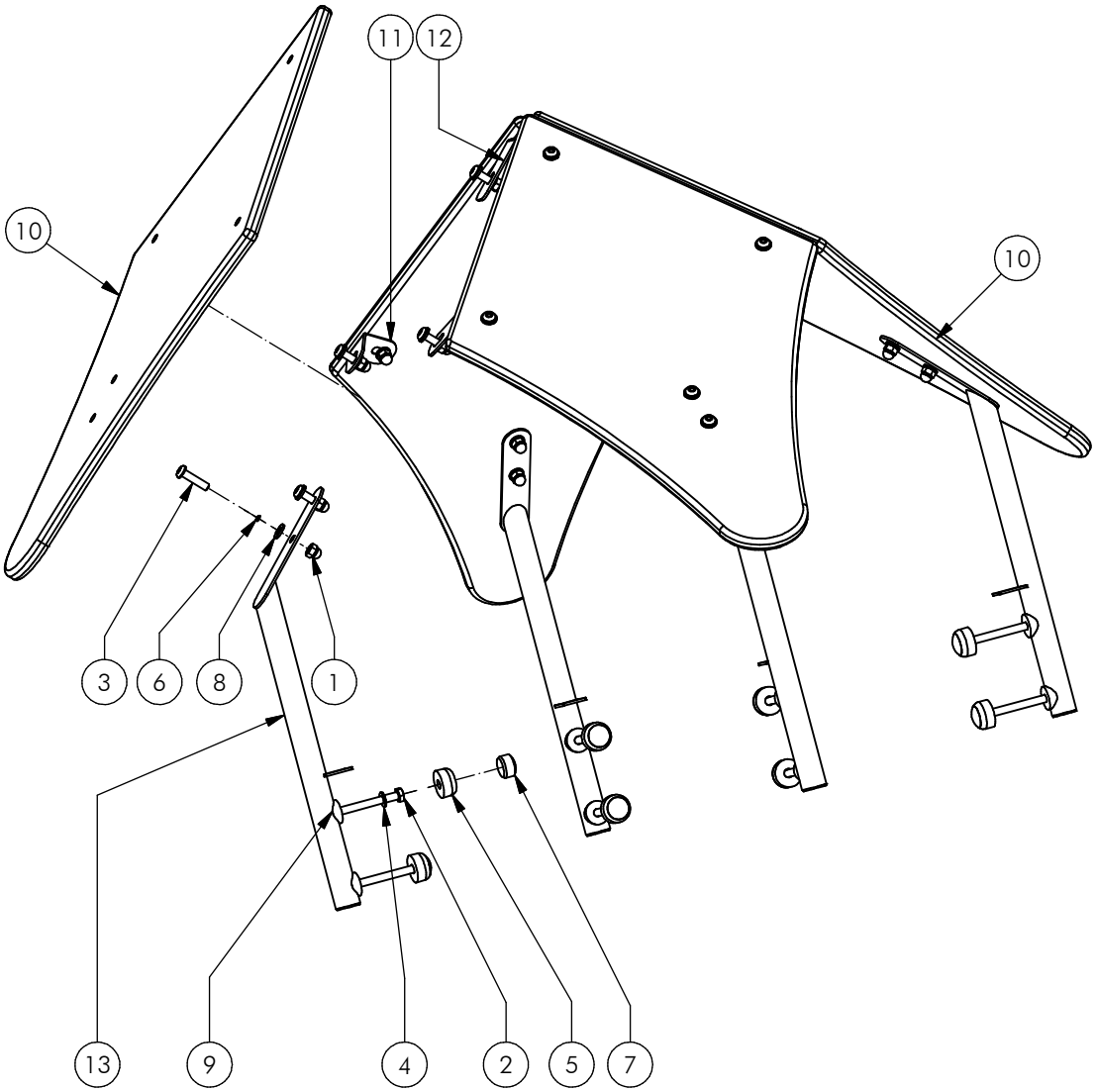

POS	N	TYPE	PROJ.	NR.	BEH.	R	BENAMING	OPMERKING
13	4	SME	UKP	546	320		Daksteun	Ukkepuk
12	1	OME	DRM	096	304		NOKBEUGEL	90 GRADEN
11	4	OME	DRM	054	304	A	Plaatbeugel	120 Graden
10	4	OPE	UKP	001	060	B	Dakplaat	Ukkepuk
9	8	KST	T33	010	000		ZADELRING	BUIS 33.7
8	20	KST	ROR	010	000		RING NYLON	M10 x 2.5 MM
7	8	KST	DOP	010	030		Beschermdop M10-M12	Dop rood
6	20	KST	DOP	006	030		OPVULDOPJE	6 MM ROOD
5	8	KST	DON	010	030		Beschermdop M10-M12	Donut Rood
4	28	BSR	030	010	002		SLUITRING	M10
3	20	BSR	023	010	040		Bolkopbout ISO 7380	M10 x 40 - RVS A2-70
2	8	BSR	021	010	100		Zeskantbout	M10 x 100 - RVS A2-70
1	20	BSR	011	010	020		DOPMOER	BORG RVS M10

BOER SPEELTOESTELLEN

Benaming *Title*: DAK

Opmerking *Comment*: UKKEPUK

Datum *Date*: 21-11-2014

Tekening *Drawing*: MOD UKP HHT 103 A

Samenstelling module *Assembly module*

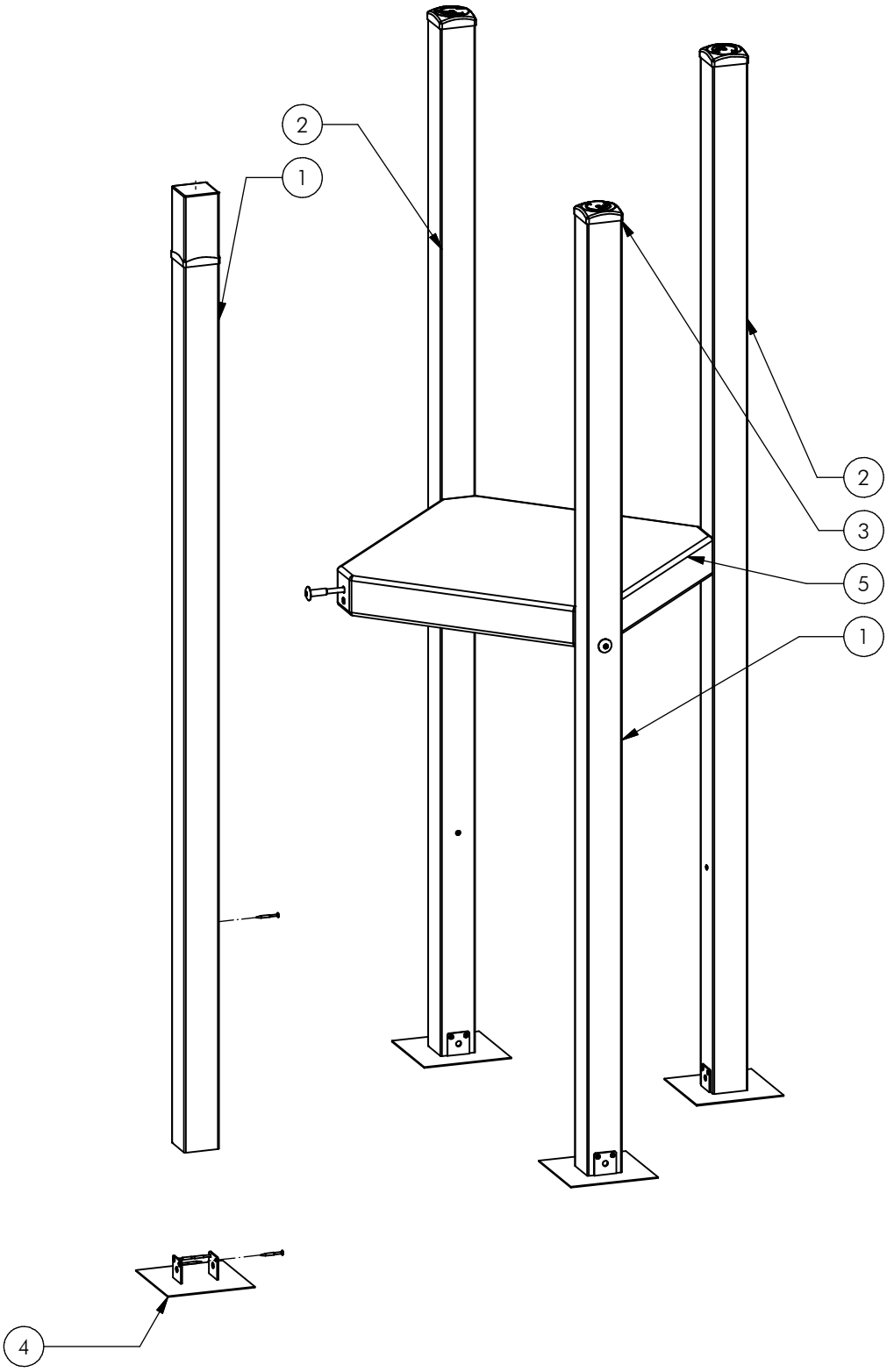

POS	N	TYPE	PROJ.	NR.	BEH.	R	BENAMING	OPMERKING
1	2	OHO	080	013	HHT		Staander HHT	80x80, lengte=2160
2	2	OHO	080	014	HHT		Staander HHT	80x80, lengte=2330
3	4	SMD	UKP	HHT	104		PAALKAP	UKKEPUK
4	4	SMD	UKP	HHT	103		ANKER PLAAT	UKKEPUK
5	1	SMD	UKP	HHT	100		VLOER VIERKANT	UKKEPUK

BOER SPEELTOESTELLEN

Benaming *Title* TOREN TUSSENSTAP

Opmerking *Comment* UKKEPUK

Datum *Date* 16-1-2007

Tekening *Drawing*

MOD UKP HHT 105

Samenstelling module *Assembly module*

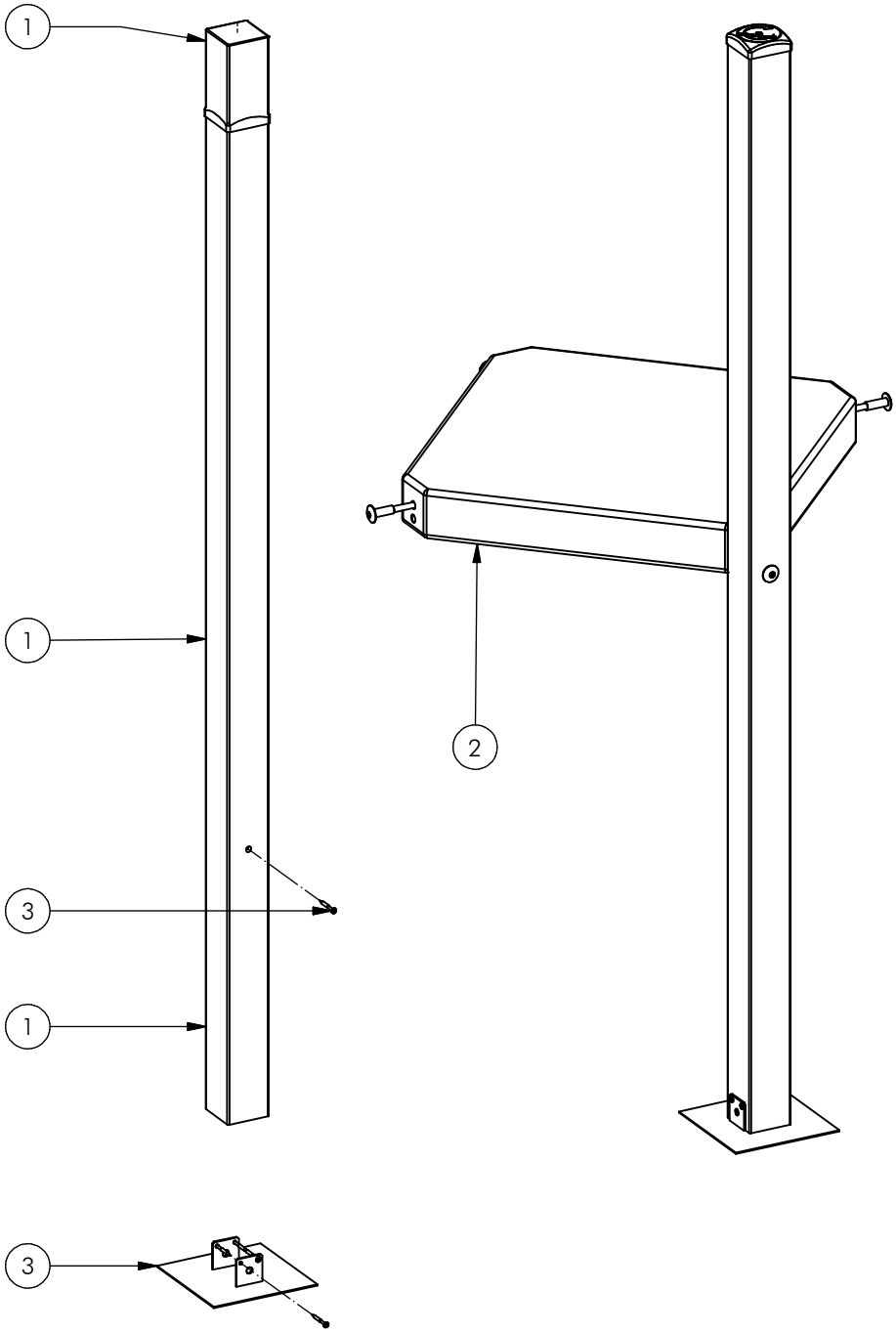

POS	N	TYPE	PROJ.	NR.	BEH.	R	BENAMING	OPMERKING
4	2	SMD	UKP	HHT	104		PAALKAP	UKKEPUK
3	2	SMD	UKP	HHT	103		ANKER PLAAT	UKKEPUK
2	1	SMD	UKP	HHT	100		VLOER VIERKANT	UKKEPUK
1	2	OHO	080	012	HHT		Staander HHT	80x80, lengte=1990

BOER SPEELTOESTELLEN

Benaming *Title*: HALF TOREN LAAG

Opmerking *Comment*: UKKEPUK

Datum *Date*: 16-1-2007

Tekening *Drawing*: MOD UKP HHT 107

Samenstelling module *Assembly module*

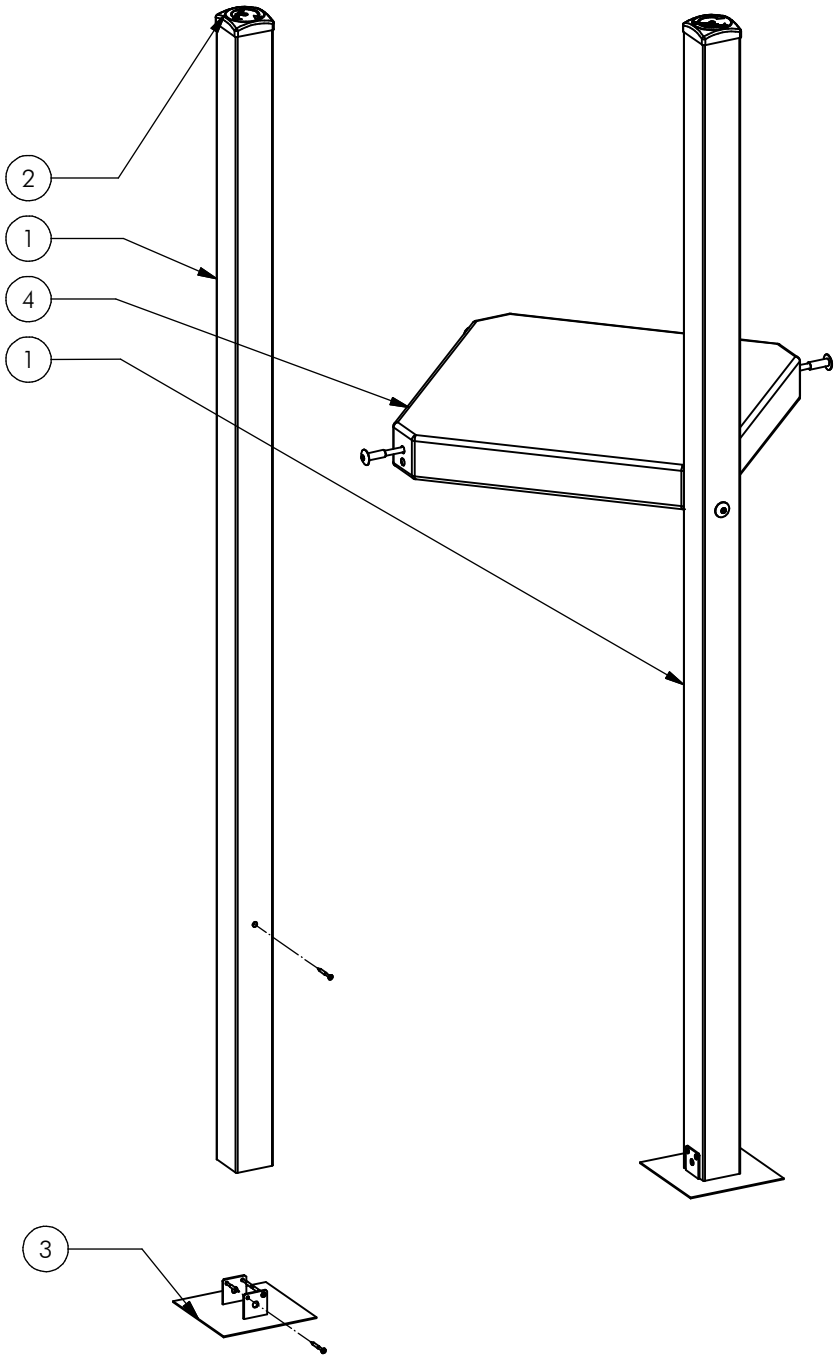

POS	N	TYPE	PROJ.	NR.	BEH.	R	BENAMING	OPMERKING
1	2	OHO	080	014	HHT		Staander HHT	80x80, lengte=2330
2	2	SMD	UKP	HHT	104		PAALKAP	UKKEPUK
3	2	SMD	UKP	HHT	103		ANKER PLAAT	UKKEPUK
4	1	SMD	UKP	HHT	100		VLOER VIERKANT	UKKEPUK

BOER SPEELTOESTELLEN

Benaming *Title* HALF TOREN HOOG

Opmerking *Comment* UKKEPUK

Datum *Date* 16-1-2007

Tekening *Drawing*

MOD UKP HHT 108

Samenstelling module *Assembly module*

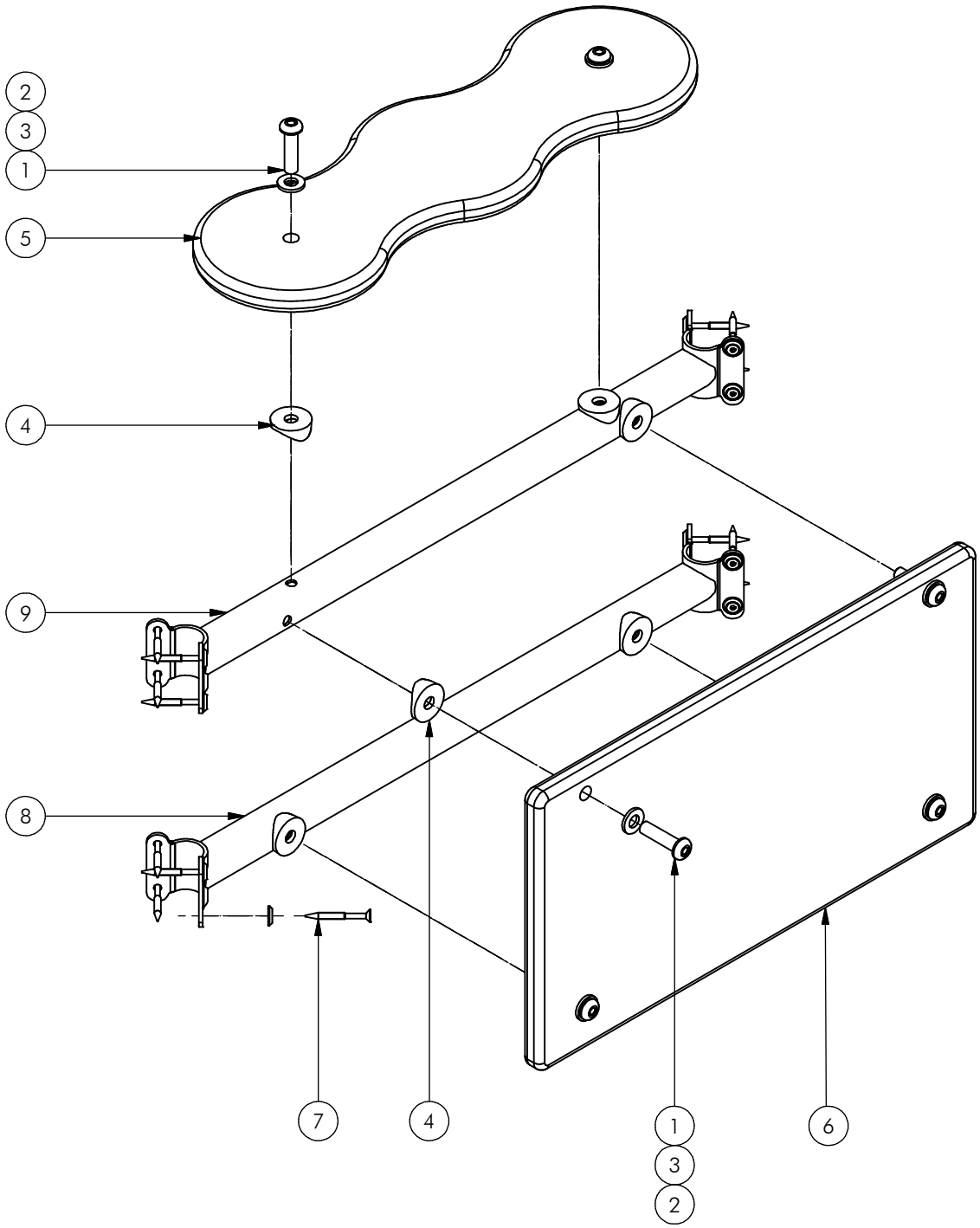

Nr	#	Type	Progr.	Volgnr	Bew.	Rev.	Benaming	Opmerking
1	6	BSR	023	010	040		Bolkopbout ISO 7380	M10 x 40 - RVS A2-70
2	6	KST	DOP	006	030		OPVULDOPJE	6 MM ROOD
3	6	KST	ROR	010	000		RING NYLON	M10 x 2.5 MM
4	6	KST	T33	010	000		ZADELRING	BUIS 33.7
5	1	OPE	UKP	010	050	B	Toonbank loket	Ukkepuk
6	1	OPE	UKP	011	030	B	Schot toonbank	Ukkepuk
7	4	SMD	UKP	HHT	105		BEVESTIGING VLINDER	UKKEPUK HHT
8	1	SME	UKP	501	320	A	SYSTEEMBUIS	UKKEPUK
9	1	SME	UKP	503	320	A	SYSTEEMBUIS	UKKEPUK

BOER SPEELTOESTELLEN

Benaming *Title*: Toonbank

Opmerking *Comment*: Ukkepuk

Datum *Date*: 13-2-2014

Tekening *Drawing*: MOD UKP HHT 121 A

Samenstelling module *Assembly module*

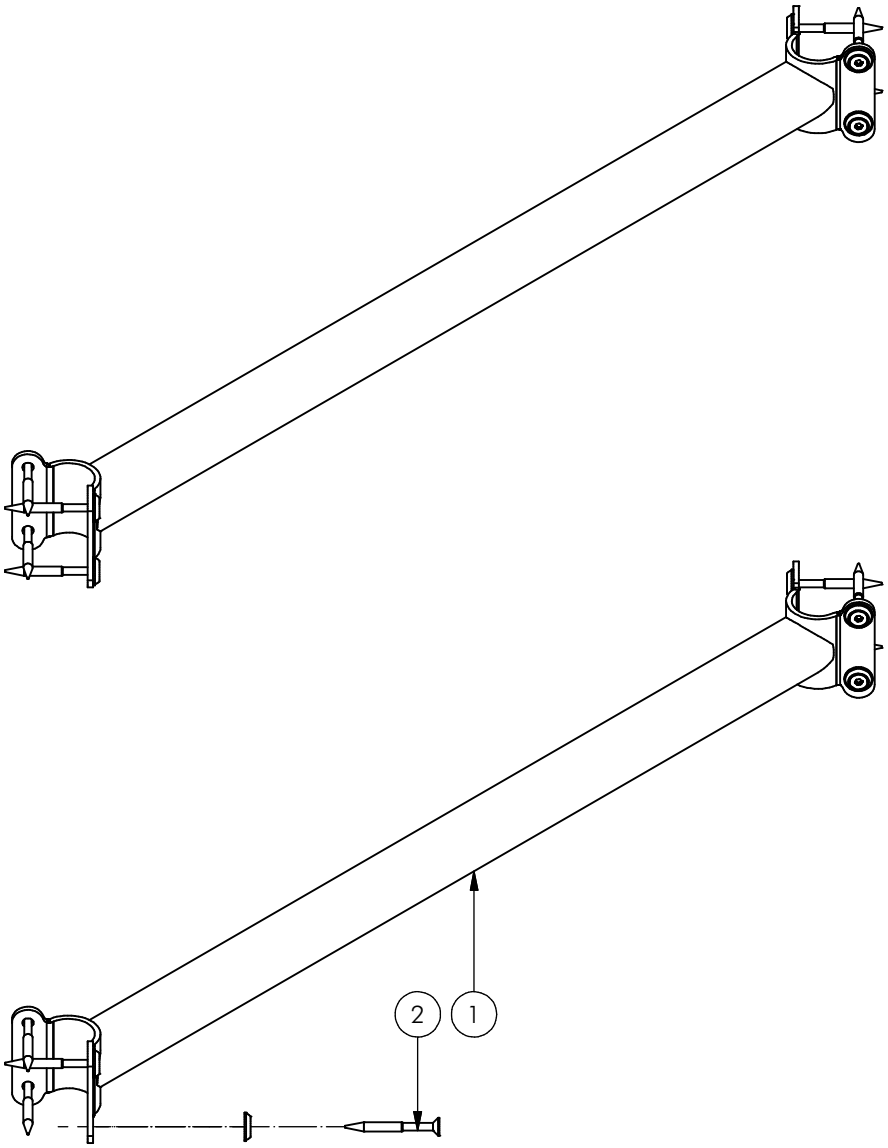

POS	N	TYPE	PROJ.	NR.	BEH.	R	BENAMING	OPMERKING
2	4	SMD	UKP	HHT	105		BEVESTIGING VLINDER	UKKEPUK HHT
1	2	SME	UKP	500	320	A	SYSTEEMBUIS	UKKEPUK

BOER SPEELTOESTELLEN

Benaming *Title* SYSTEEMBUIS DUBBEL

Opmerking *Comment* UKKEPUK

Datum *Date* 19-1-2007

Tekening *Drawing* MOD UKP HHT 131

Samenstelling module *Assembly module*

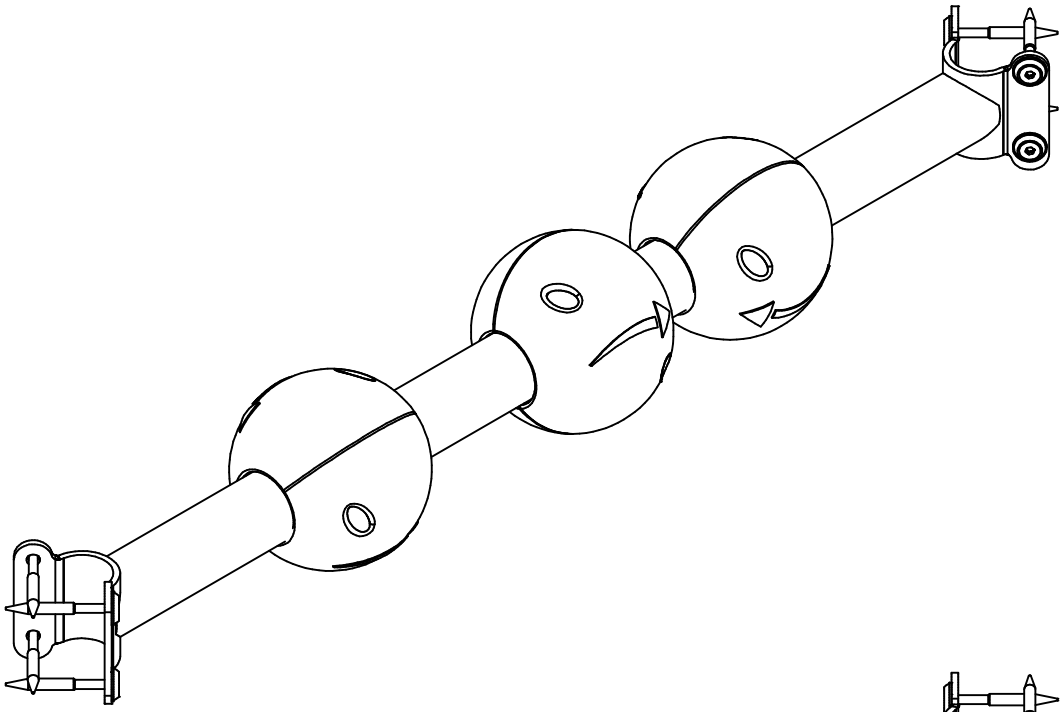

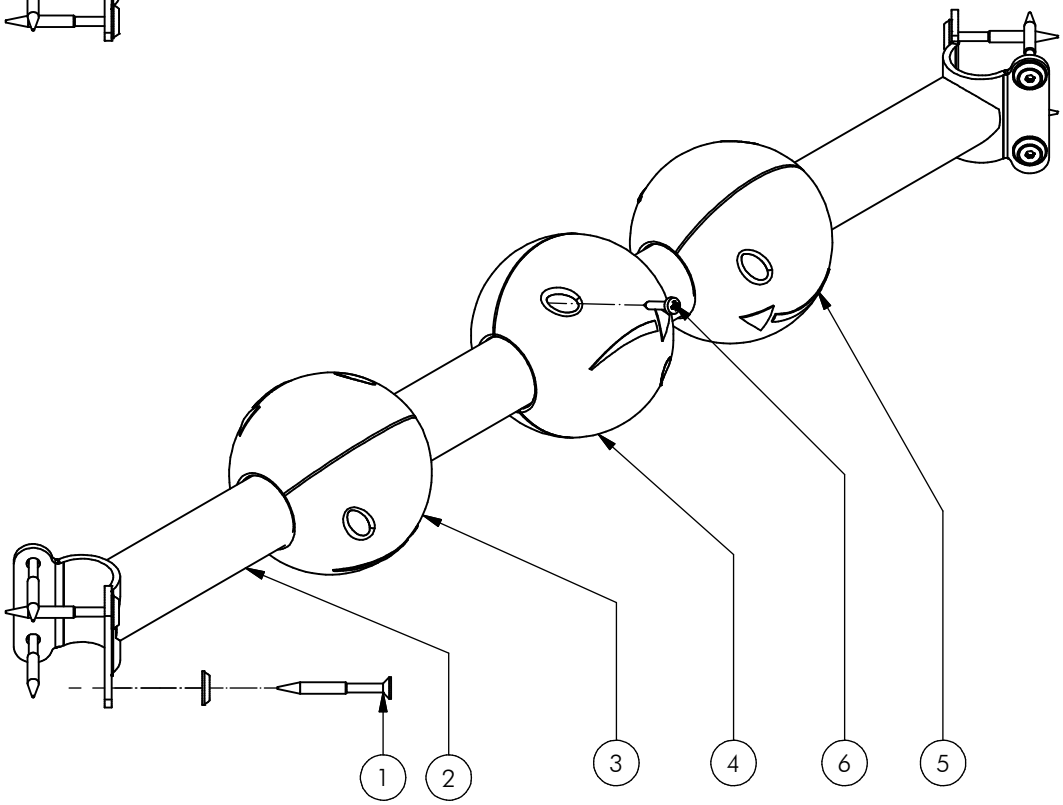

6	24	BSR	005	004	019		Zelfborende PIAS schoef	3,5 x 19
5	4	KST	BOL	036	050		Telbol helft	Blauw
4	4	KST	BOL	036	010		Telbol helft	Geel
3	4	KST	BOL	036	030		Telbol helft	Rood
2	2	SME	UKP	500	320	A	SYSTEEMBUIS	UKKEPUK
1	4	SMD	UKP	HHT	105		BEVESTIGING VLINDER	UKKEPUK HHT
POS	N	TYPE	PROJ.	NR.	BEH.	R	BENAMING	OPMERKING

BOER SPEELTOESTELLEN

Benaming *Title* TELBOL DUBBEL

Opmerking *Comment* UKKEPUK

Datum *Date* 19-1-2007

Tekening *Drawing*

MOD UKP HHT 135

Samenstelling module *Assembly module*

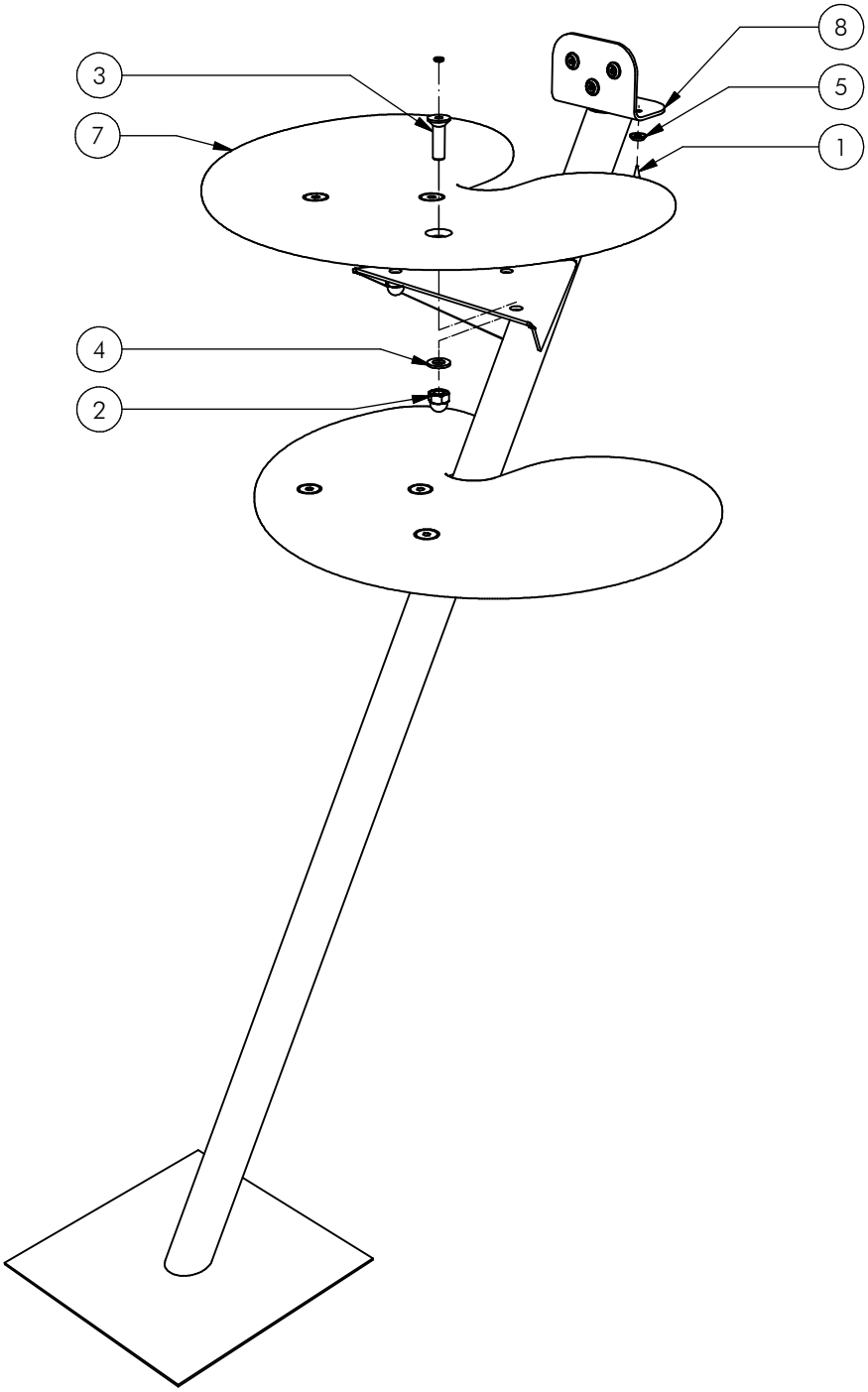

Nr	#	Type	Progr.	Volgnr	Bew.	Rev.	Benaming	Opmerking
1	5	BSR	002	005	030		Schroef Assy	5 x 30 - RVS A2-70
2	6	BSR	011	010	020		DOPMOER	BORG RVS M10
3	6	BSR	024	010	035		Verzonken bout	M10 x 35 - RVS A2-70
4	6	BSR	030	010	002		SLUITRING	M10
5	5	BSR	036	005	015		Facet ring	M5 - RVS A2-70
6	6	KST	DOP	006	030		OPVULDOPJE	6 MM ROOD
7	2	OHO	UKP	128	COA	D	Platform	Boomtrap
8	1	SME	UKP	577	320	C	Trapboom	Ukkepuk

BOER SPEELTOESTELLEN

Benaming *Title*: Boormtrap

Opmerking *Comment*: Ukkepuk

Datum *Date*: 2-10-2007

Tekening *Drawing*: MOD UKP HHT 168

Samenstelling module *Assembly module*

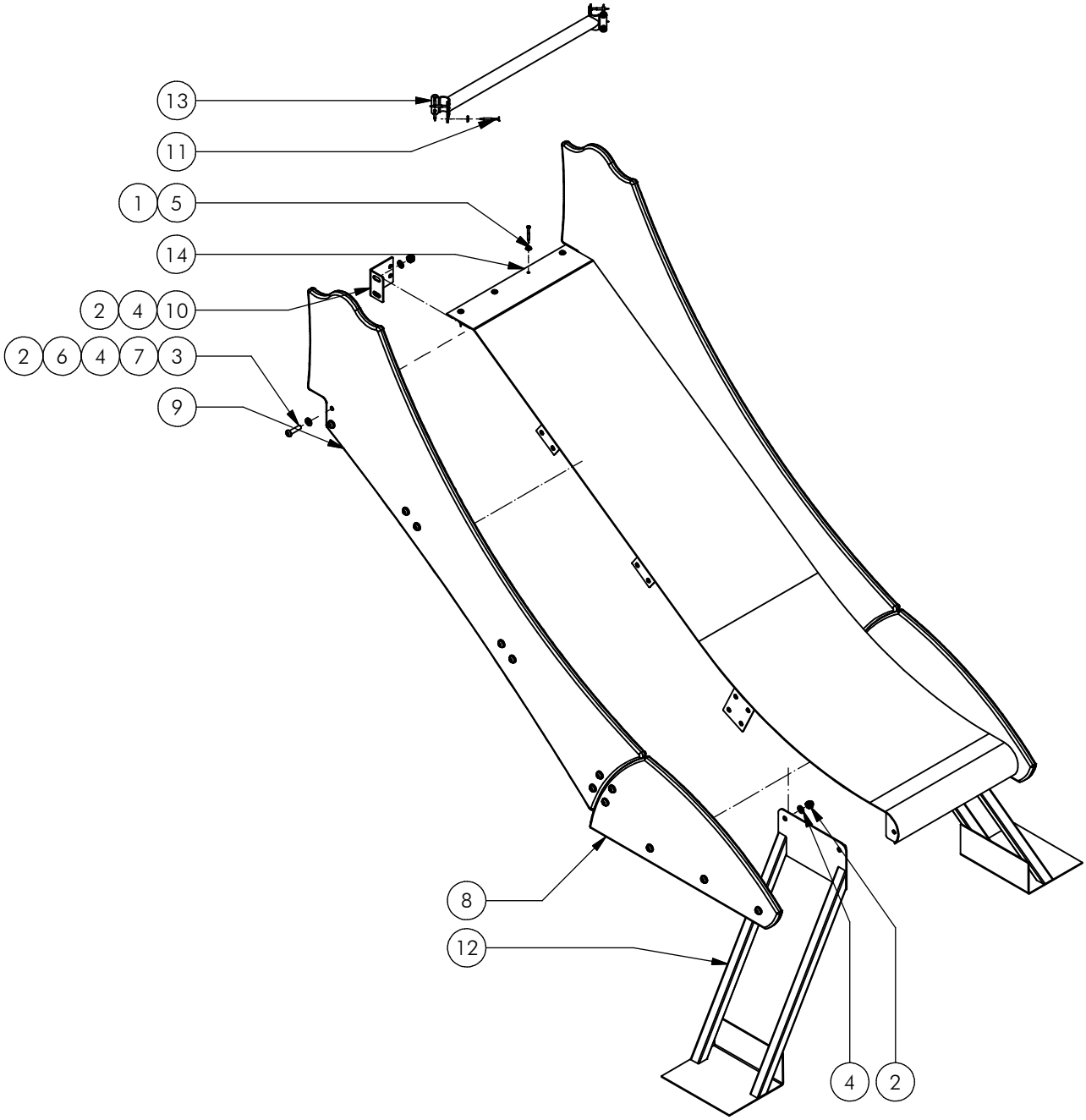

POS	N	TYPE	PROJ.	NR.	BEH.	R	BENAMING	OPMERKING
14	1	SME	UKP	586	320	B	Glijvlak hoge glijbaan	Ukkepuk
13	1	SME	UKP	500	320	A	SYSTEEMBUIS	UKKEPUK
12	2	SME	DRM	051	372	A	ANKER ZOEF	SCHUIN
11	2	SMD	UKP	HHT	105		BEVESTIGING VLINDER	UKKEPUK HHT
10	2	OME	UKP	577	304		Bevestigingshoek	Glijbaan Ukkepuk
9	2	OPE	UKP	043	050	A	Zijwand hoge glijbaan	Ukkepuk
8	2	OPE	UKP	042	010	C	Neus hoge glijbaan	Ukkepuk
7	26	KST	ROR	010	000		RING NYLON	M10 x 2.5 MM
6	26	KST	DOP	006	030		OPVULDOPJE	6 MM ROOD
5	4	BSR	036	005	015		Facet ring	M5 - RVS A2-70
4	26	BSR	030	010	002		SLUITRING	M10
3	26	BSR	023	010	040		Bolkopbout ISO 7380	M10 x 40 - RVS A2-70
2	26	BSR	011	010	020		DOPMOER	BORG RVS M10
1	4	BSR	002	005	050		SCHROEF	5 x 50

BOER SPEELTOESTELLEN

Benaming *Title*: Glijbaan

Opmerking *Comment*: 93cm Vloer

Datum *Date*: 6-12-2013

Tekening *Drawing*: MOD UKP HHT 178 A

Samenstelling module *Assembly module*

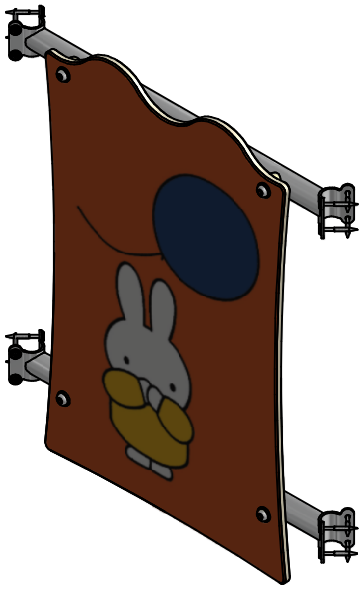

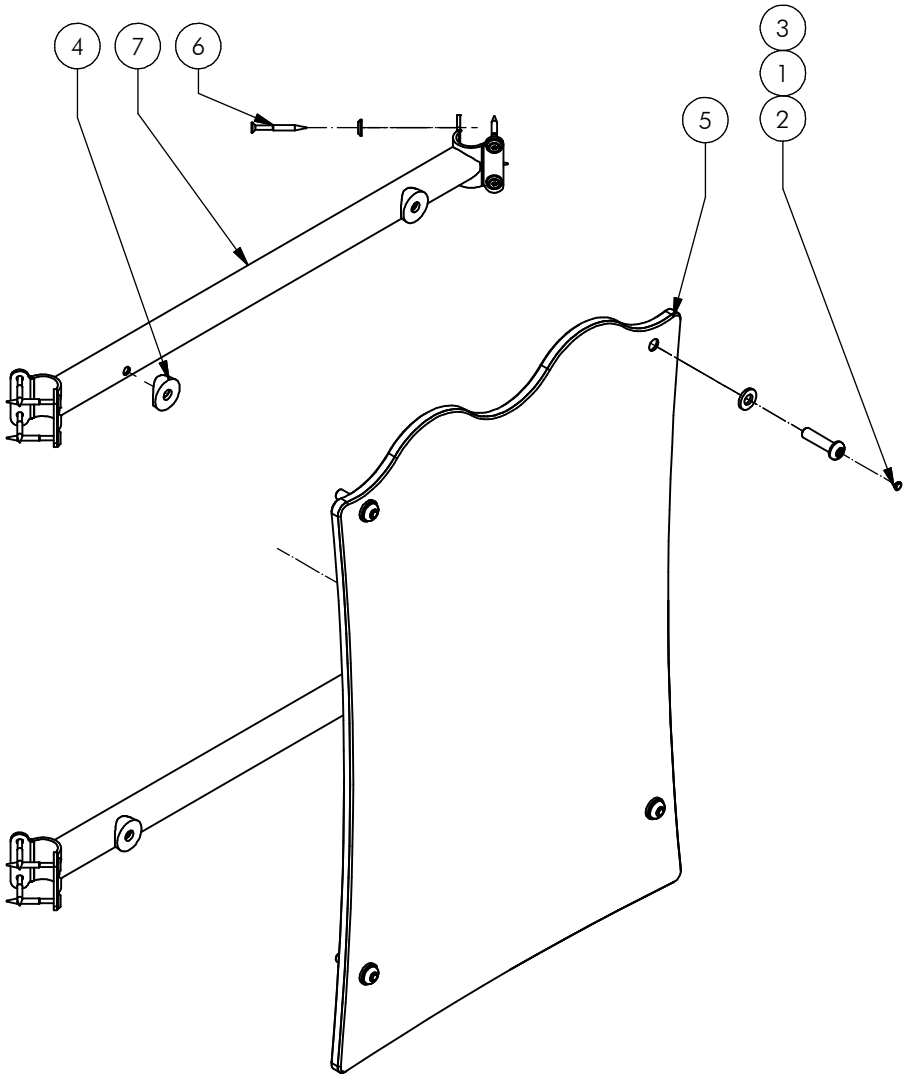

Nr	#	Type	Progr.	Volgnr	Bew.	Rev.	Benaming	Opmerking
1	4	BSR	023	010	040		Bolkopbout ISO 7380	M10 x 40 - RVS A2-70
2	4	KST	DOP	006	030		OPVULDOPJE	6 MM ROOD
3	4	KST	ROR	010	000		RING NYLON	M10 x 2.5 MM
4	4	KST	T33	010	000		ZADELRING	BUIS 33.7
5	1	SMD	UKP	HHT	111		Wandje Nijntje oranje	Ukkepuk
6	4	SMD	UKP	HHT	105		BEVESTIGING VLINDER	UKKEPUK HHT
7	2	SME	UKP	501	320	A	SYSTEEMBUIS	UKKEPUK

BOER SPEELTOESTELLEN

Benaming *Title*: Wandje Nijntje oranje

Opmerking *Comment*: Ukkepuk

Datum *Date*: 4-12-2014

Tekening *Drawing*: MOD UKP HHT 204

Samenstelling module *Assembly module*

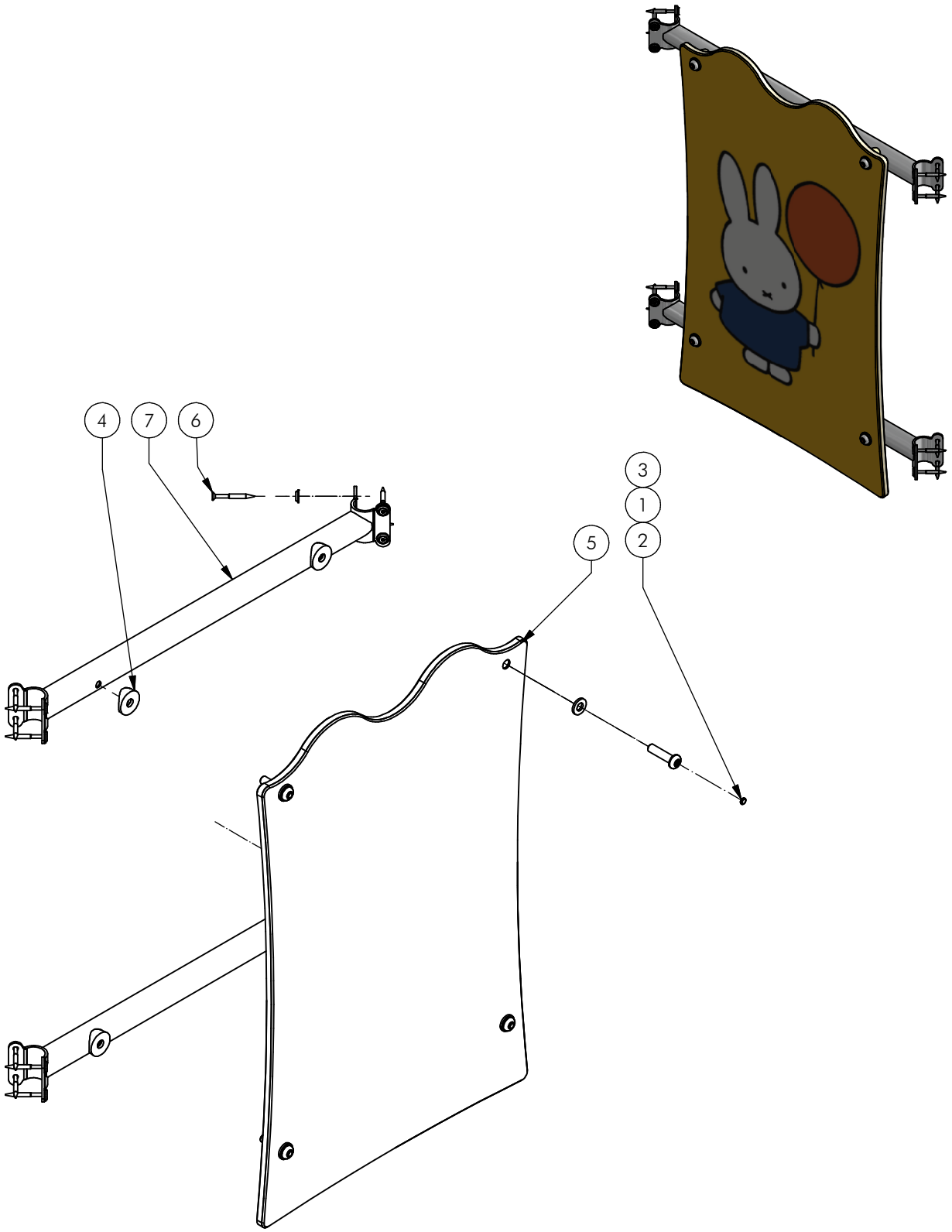

Nr	#	Type	Progr.	Volgnr	Bew.	Rev.	Benaming	Opmerking
1	4	BSR	023	010	040		Bolkopbout ISO 7380	M10 x 40 - RVS A2-70
2	4	KST	DOP	006	030		OPVULDOPJE	6 MM ROOD
3	4	KST	ROR	010	000		RING NYLON	M10 x 2.5 MM
4	4	KST	T33	010	000		ZADELRING	BUIS 33.7
5	1	SMD	UKP	HHT	112		Wandje Nijntje geel	Ukkepuk
6	4	SMD	UKP	HHT	105		BEVESTIGING VLINDER	UKKEPUK HHT
7	2	SME	UKP	501	320	A	SYSTEEMBUIS	UKKEPUK

BOER SPEELTOESTELLEN

Benaming *Title*: Wandje Nijntje geel

Opmerking *Comment*: Ukkepuk

Datum *Date*: 4-12-2014

Tekening *Drawing*: MOD UKP HHT 205

Samenstelling module *Assembly module*

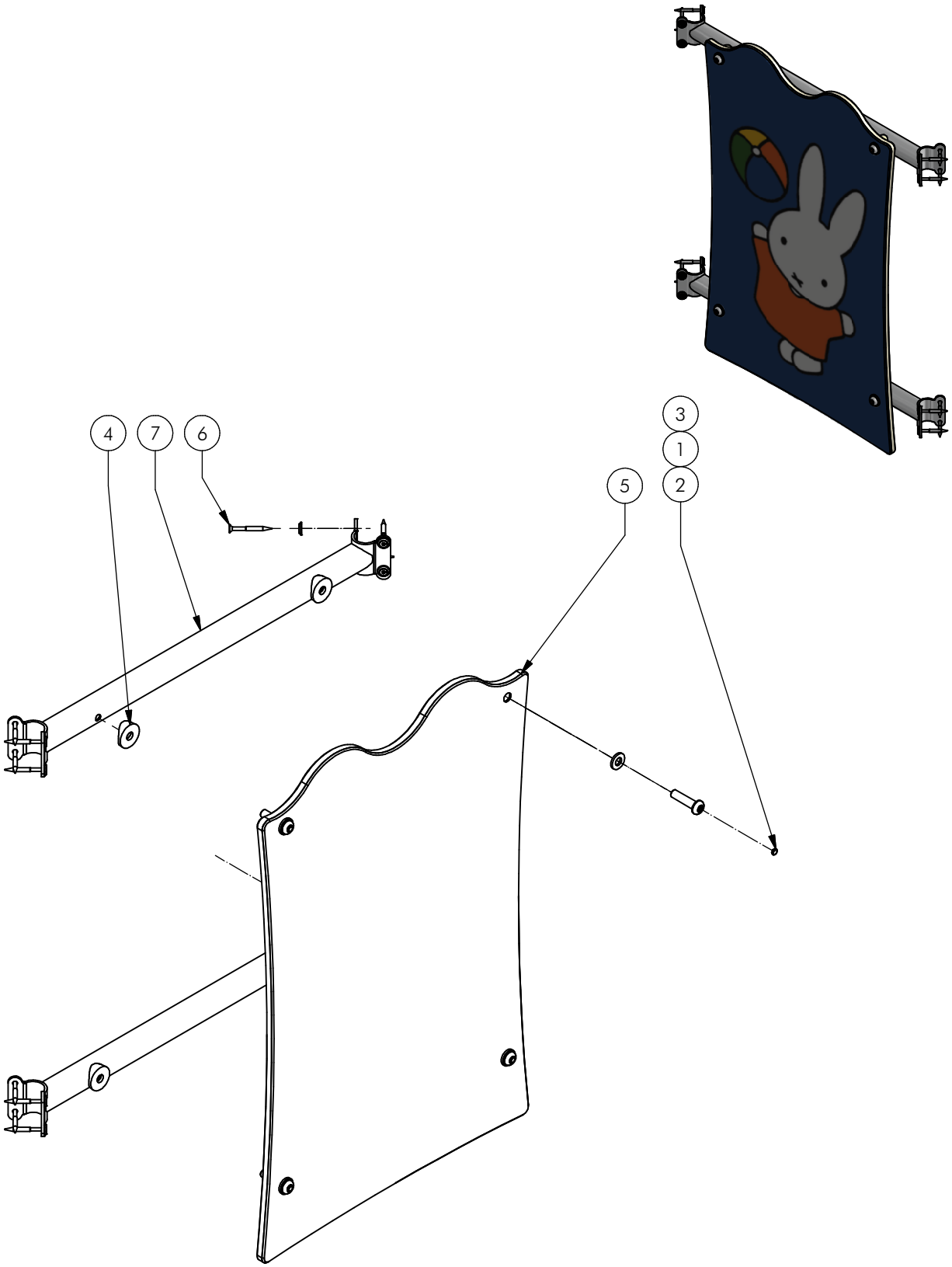

Nr	#	Type	Progr.	Volgnr	Bew.	Rev.	Benaming	Opmerking
1	4	BSR	023	010	040		Bolkopbout ISO 7380	M10 x 40 - RVS A2-70
2	4	KST	DOP	006	030		OPVULDOPJE	6 MM ROOD
3	4	KST	ROR	010	000		RING NYLON	M10 x 2.5 MM
4	4	KST	T33	010	000		ZADELRING	BUIS 33.7
5	1	SMD	UKP	HHT	113		Wandje Nijntje blauw	Ukkepuk
6	4	SMD	UKP	HHT	105		BEVESTIGING VLINDER	UKKEPUK HHT
7	2	SME	UKP	501	320	A	SYSTEEMBUIS	UKKEPUK

BOER SPEELTOESTELLEN

Benaming *Title*: Wandje Nijntje blauw

Opmerking *Comment*: Ukkepuk

Datum *Date*: 4-12-2014

Tekening *Drawing*: MOD UKP HHT 206

Samenstelling module *Assembly module*