BOERPLAY

Combination equipment

VRBE080.000

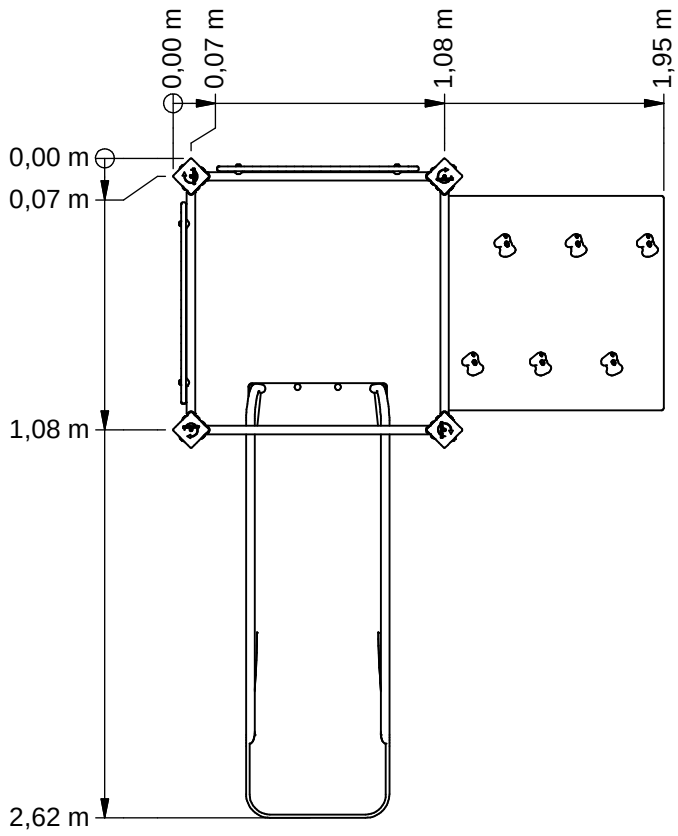

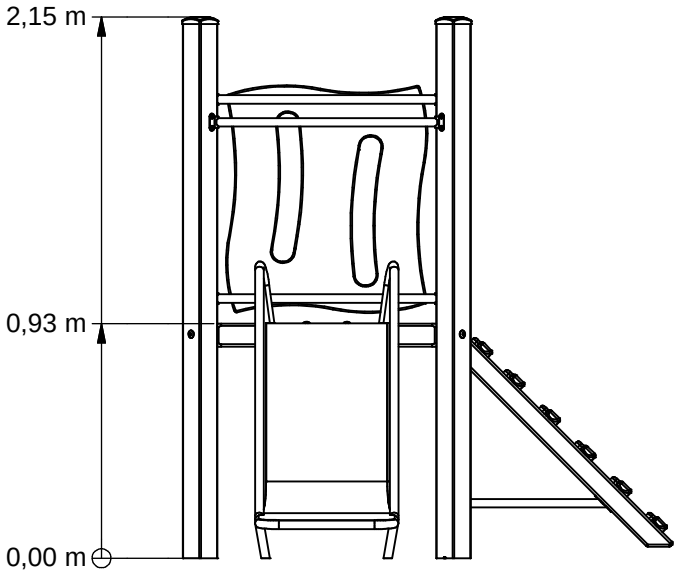

BOER SPEELTOESTELLEN

Benaming *Title*	Vrijbuiter
Opmerking *Comment*	Hardhout
Datum *Date*	17-2-2014

Tekening *Drawing*

TOE VRB 080 000 A

Afmetingen *Dimensions*

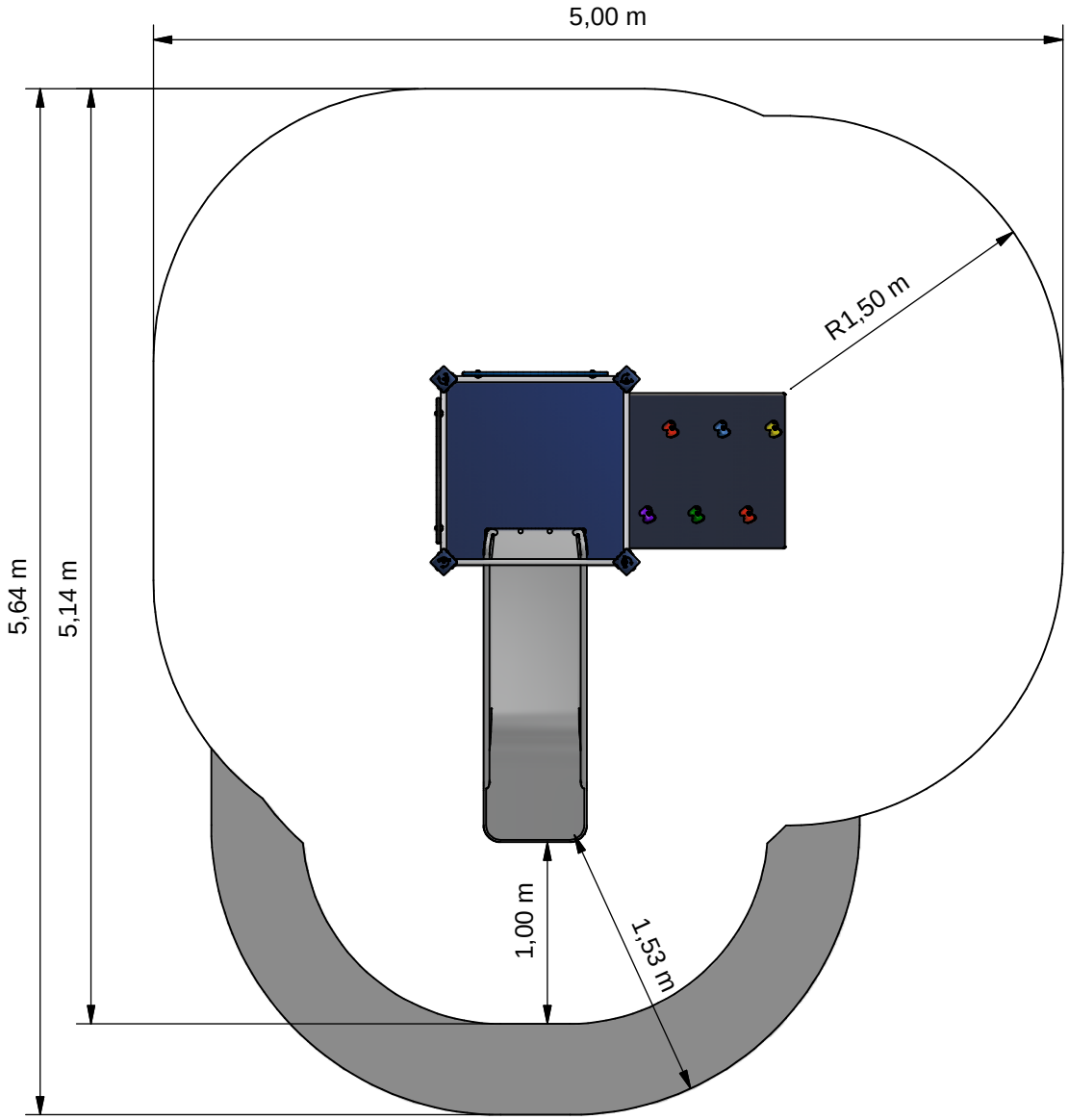

Opvangzone
Impact area
Obstakelvrije zone
Obstacle free zone

BOER SPEELTOESTELLEN

Benaming *Title*	Vrijbuiter
Opmerking *Comment*	Hardhout
Datum *Date*	17-2-2014

Tekening *Drawing*

TOE VRB 080 000 A

Obstakelvrije zone *Obstacle free zone*

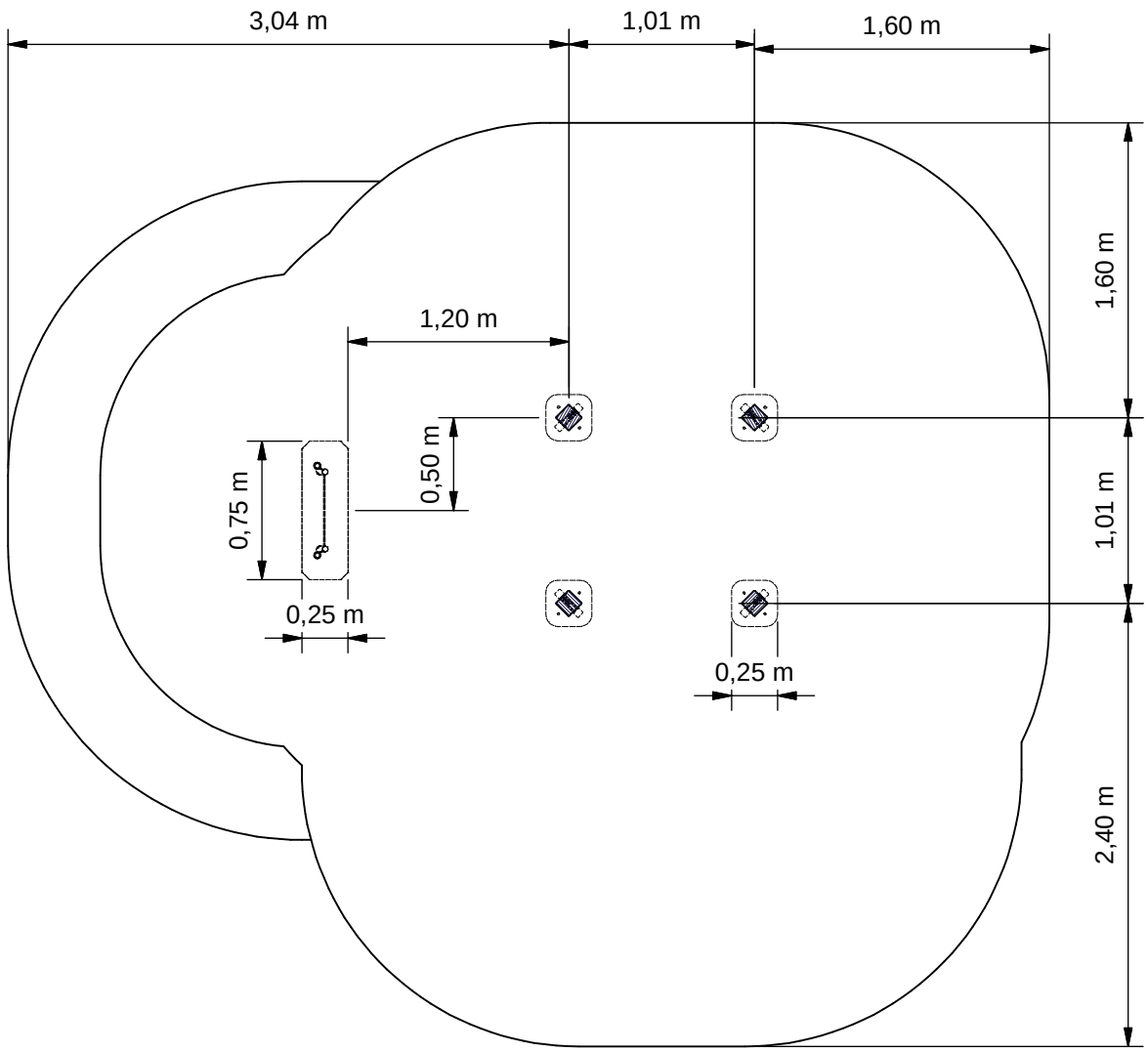

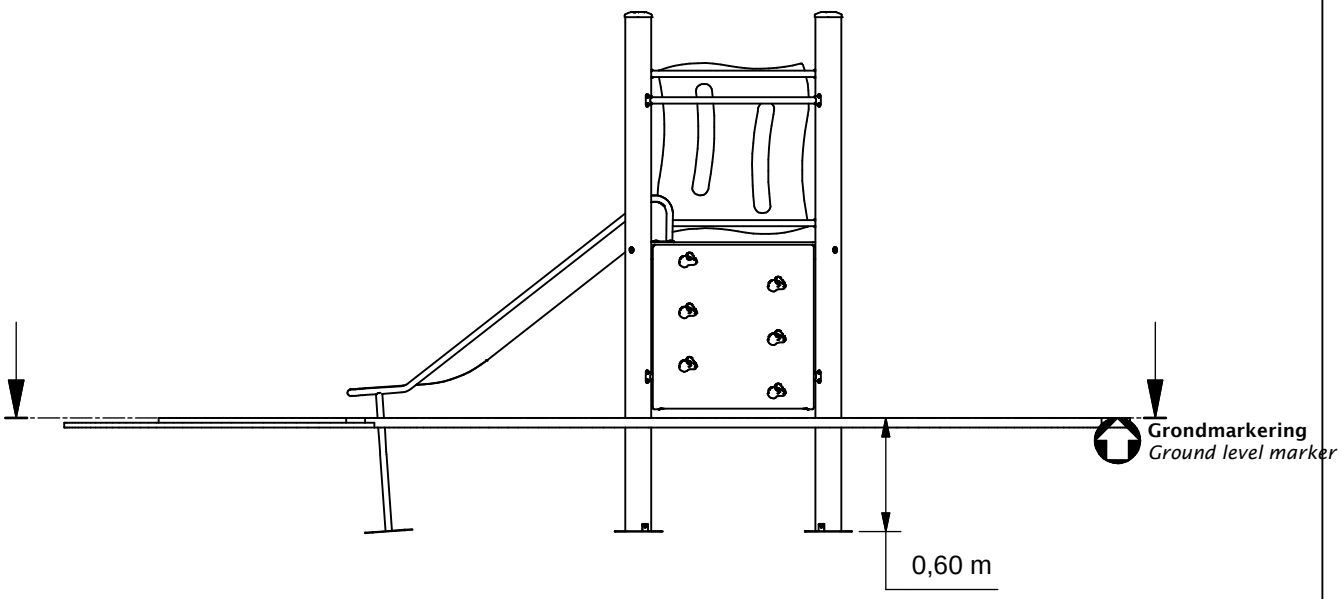

BOER SPEELTOESTELLEN

Benaming *Title*	Vrijbuiter
Opmerking *Comment*	Hardhout
Datum *Date*	17-2-2014

Tekening *Drawing*

TOE VRB 080 000 A

Bodemplan *Groundplan*

Geleverde modules:
Zie tabel

Montageinstructie:
- De hoofdmaten geven de maten van de staanders en vloeren aan
- De detailtekeningen geven specifiek de maten van de verbindingen aan
- De modules met buizen zijn op de tekeningen bemaat op bovenkant kopplaat
- Overige modules zijn bemaat op de bovenkant (klimwanden, paalkappen, etc.)

Montagevolgorde:
1 - Graaf de gaten volgens het bodemplan
2 - Plaats toren met 1,2,4,5
3 - Plaats 3, verbind deze aan toren
4 - Plaats 6, verbind deze aan toren
5 - Controleer of het toestel voldoet aan de afmetingen zoals op blad 'afmetingen'
6 - Dicht de gaten en verdicht het zand

Controles:
1 - Correcte opbouw en alle bevestigingsmiddelen
2 - Controleer de afmetingen van de valbodem t.o.v. het toestel

Supplied modules:
See table

Assembly instruction:
- The main dimensions indicate the dimensions of the posts and floors
- The detailed dimensions show the specific dimensions of the connections
- The modules which contain tubes are dimensioned at the top of the flanges
- Other modules are dimensioned at the top (climbing walls, caps for the posts, etc.)

Assembly sequence:
1 - Dig the holes according to the ground plan
2 - Place tower with 1,2,4,5
3 - Place 3, attach it to tower
4 - Place 6, attach it to tower
5 - Check that the equipment conforms to the dimensions shown on sheet 'dimensions'
6 - Close the holes and compact the sand

Checks:
1 - Correct assembly and all the fasteners
2 - Check the dimensions of the safety area with regard to the play equipment

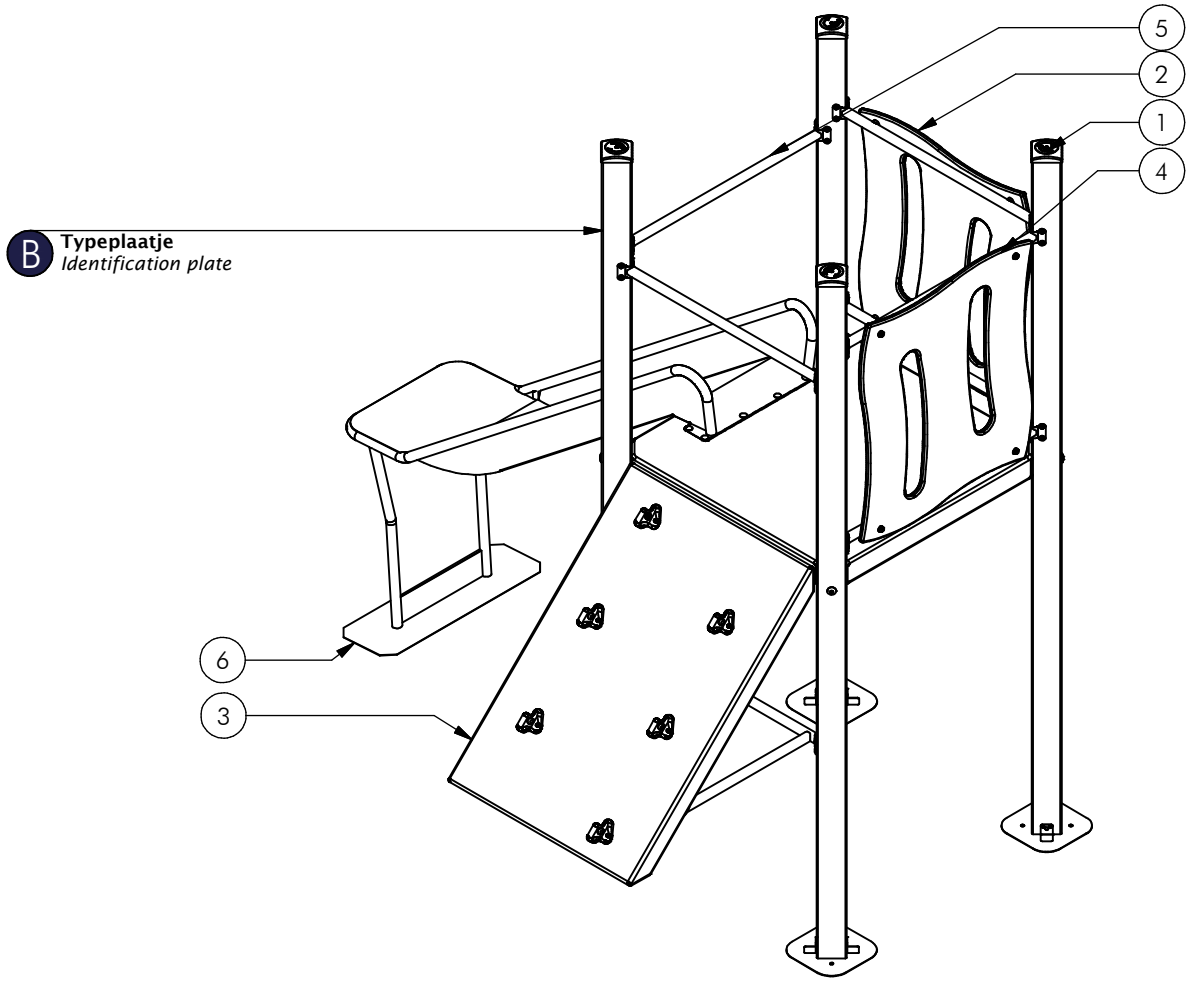

Nr	#	Type	Progr.	Volgnr	Bew.	Rev.	Benaming	Opmerking
1	1	MOD	VRB	HHT	001		Lage Toren	Standaard
2	1	MOD	VRB	HHT	011	A	WANDJE SLEUF	ROOD
3	1	MOD	VRB	HHT	027		OPLOOP	VRB
4	1	MOD	VRB	HHT	059	A	WANDJE SLEUF	BLAUW
5	1	MOD	VRB	HHT	075		SYSTEEMBUIS	ENKEL
6	1	MOD	VRB	HHT	190		Glijbaan 93 cm	Module HHT

BOER SPEELTOESTELLEN

Benaming / Title: Vrijbuiter
Opmerking / Comment: Hardhout
Datum / Date: 17-2-2014

Tekening / Drawing: TOE VRB 080 000 A

Modules *Modules*

VRBE080.000

Combination equipment

LOGBOOK

(Onderstaand logboek kan gebruikt worden om te voldoen aan de eisen, gesteld in artikel 14 van het Warenwetbesluit Attractie- en Speeltoestellen)

Type indication	Nature Play
Product code	VRBE080.000
Name of equipment	Vrijbuiter Klimklautertoestel
Maximum height of fall	1,0 m
Year of construction	2017
Certificate	09200116201
inspection authority	Liftinstituut B.V. Buikslotermeerplein 381, A'dam - 1025 XE Amsterdam
Name manufacturer	BOERplay Hyacintstraat 2 - 4255 HX Nieuwendijk Phone: +31 (0)183 40 23 66 Fax: +31 (0)183 40 35 64
name installer	_____
	_____
Description of equipment	Combination equipment
Location of equipment	_____

Data about the owner of the play equipment

Name:	_____
Address:	_____
Postcode and town:	_____
Contact person:	_____
Telephone number:	_____

Data about the administrator of the play equipment

Name:	_____
Address:	_____
Postcode and town:	_____
Contact person:	_____
Telephone number:	_____

LOGBOOK

Inspection and maintenance intervals

Nr.	Inspection	Maintenance	months between inspections
1	Verify equipment's stability, junctions and missing parts. Inspect bolts, screws and nuts for absence, jams, corrosion and wear.	Add missing parts, secure joints, apply missing fixing agent and replace corroded parts.	1
2	Check suspension for wear.	Replace worn parts and/or remove non-functioning parts.	1
3	Inspect rotating parts such as hinges, rolling-element bearings, etc. for wear and acceptability.	Replace worn parts and/or remove non-functioning parts.	1
4	Check wood for splinters, unacceptable damage and signs of rot. Especially at ground level.	Repair damage. Replace affected wood. Smoothen splintered wood and sharp edges.	1
5	Inspect foundation for stability, tearing and coverage.	Restore foundation and covering material.	3
6	Examine rubber and synthetic parts for wear, damage and break.	Replace original parts.	3
7	Inspect metal for corrosion and damage in the coating.	Restore any damaged coating (after removing rust and applying primer).	6
8	Check ropes, cables, chains and nets for wear and damage. Steel cables and nets which are tensioned must be checked for tension.	Replace parts where necessary. Steel cables and nets must be tensioned.	3
9	Inspect equipment for unsafe changes and additions.	Remove unsafe additions and correct unsafe changes.	1
10	Inspect safety surfaces.	Restore and repair where necessary.	1

Remarks

1. If used intensively, all points require extra attention.
2. Extreme weather conditions and locations may require a higher inspection frequency. Discuss this with the supplier.
3. Vandalism-sensitive locations require stricter inspections, possibly daily.
4. Check the terrain regularly for items that do not belong there, are unsafe or may be used wrongly. Examples are poisonous plants, glass shards, etc. Frequency depends on strain.
5. Remember that bad maintenance leads to unsafe conditions and notably faster impoverishment of the playground area.
6. Replacement parts can be ordered at the manufacturer with the part numbers on the module drawing. Drawings can be found in de user guide.
7. The impact area shall be provided with impact attenuating surface according to the specified falling height.
8. This list is conform the CEN-standard "playground equipment and surfacing NEN-EN 1176-7".

LIFTINSTITUUT

PRODUCTS
RvA C 067

TYPE-EXAMINATION CERTIFICATE

Acting under the " Warenwetbesluit Attractie- en Speeltoestellen" issued by Liftinstituut B.V. commissioned by departmental order, no. VGP/PSL 2857566 from 27 Juni 2008.

Certificate nr.	: NL 09-2001-162-01	Revision nr.: 200116201
Description of the product	: Playground equipment, made up by modules	
Trademark, type	: Speelwijzer, MOD VRB: 001 t/m 019, 021 t/m 027, 029, 031,032, 034 t/m 062, 065, 066, 071 t/m 074, 076, 077, 079 t/m 082, 190 t/m 193	
Name and address of the manufacturer	: Speelwijzer Nijverheidsstraat 8 5317 NL Nederhemert Noord	
Name and address of the certificate holder	: Speelwijzer Nijverheidsstraat 8 5317 NL Nederhemert Noord	
Certificate issued on the basis of the following requirements	: Warenwetbesluit Attractie- en Speeltoestellen	
Test laboratory	: None	
Date and number of the laboratory report	: None	
Date of type-examination	: September 3th 2001, February 9th 2009	
Annexes with this certificate	Report belonging to the type-examination certificate nr.: NL 09-2001-162-01	
Additional remarks	: This certificate supersedes type certificate dated June 21th 2002, with certificate number NL 01-2001-162-01	
Conclusion	: The playground equipment meets the requirements of the above specified European standard(s) and "Warenwetbesluit Attractie- en Speeltoestellen" taking into account any additional remarks mentioned above.	

Issued in Amsterdam

Date of issue : April 7th, 2009

Ir. V.M.A. Barendregt
Senior Officer Certification & Technology
Liftinstituut B.V.

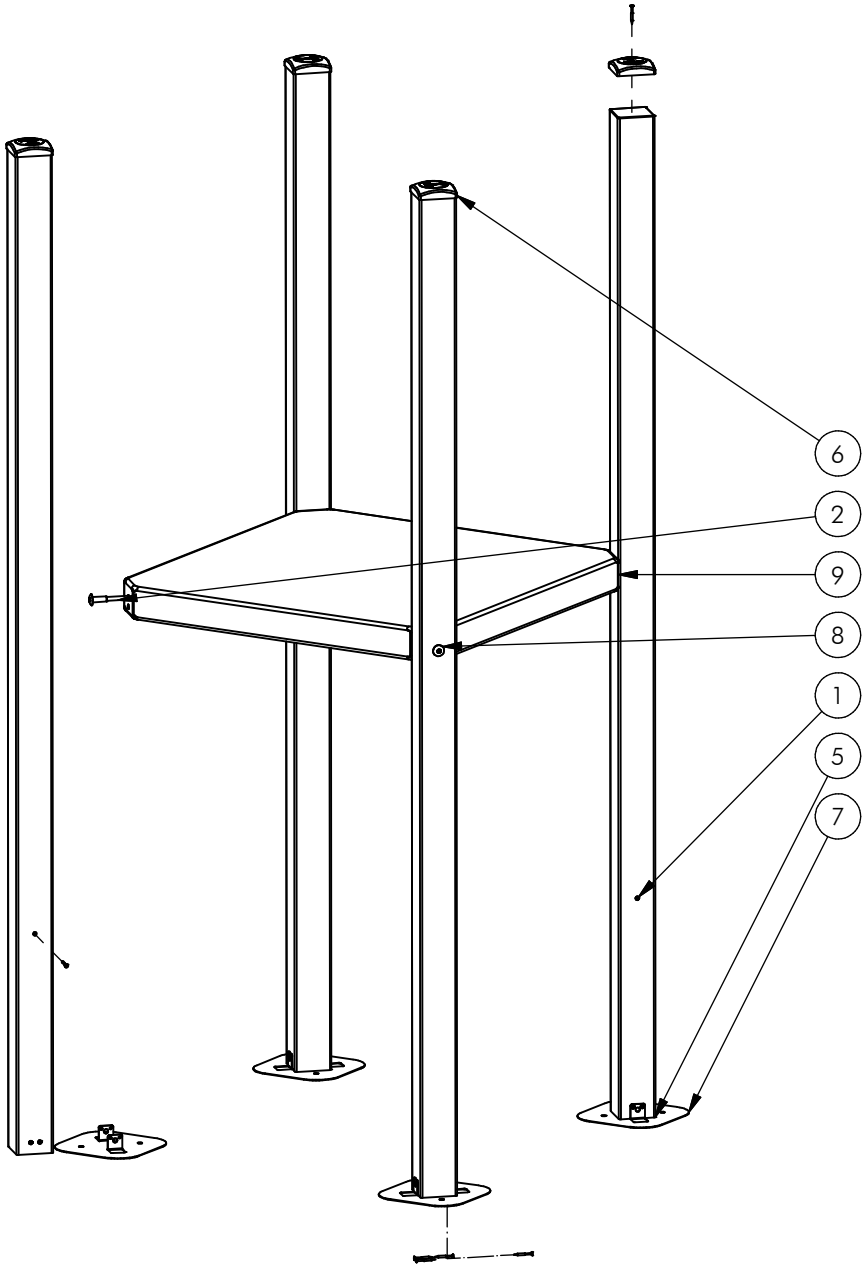

Nr.	#	Type	Progr.	Volgnr.	Bew.	Rev.	Benaming	Opmerking
1	24	BSR	002	005	050		Schroef Assy	5 x 50 - RVS A2-70
2	4	BSR	021	010	110		Zeskantbout	M10 x 110 - RVS A2-70
3	4	BSR	035	010	030		CARROSSERIERING	M10 x 30 x 2,5
4	4	KST	LAM	015	005		LAMELLENSTOP	ROND 15
5	4	OHO	HHT	100	012		Staander HHT	100x100, lengte=2730
6	4	OME	KAP	100	502	B	Paalkap 100x100	Aluminium
7	4	OME	VRB	903	VZP	C	Voetplaat	100 x 100
8	4	RNT	BUS	M10	040		DRAADBUS	M10 x 40
9	1	SHO	VRB	001	COA	C	Vloer VRB	Vierkant

BOER

Benaming *Title* Lage Toren

Opmerking *Comment* Standaard

Datum *Date* 4-3-2009

Tekening *Drawing*

MOD VRB HHT 001

Samenstelling module *Assembly module*

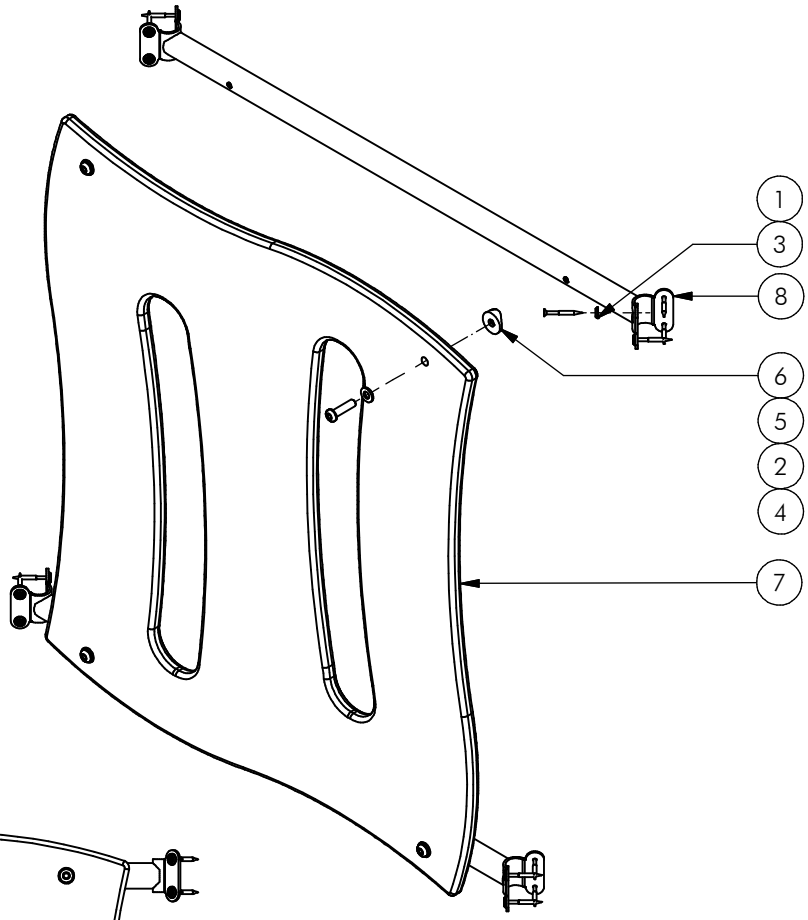

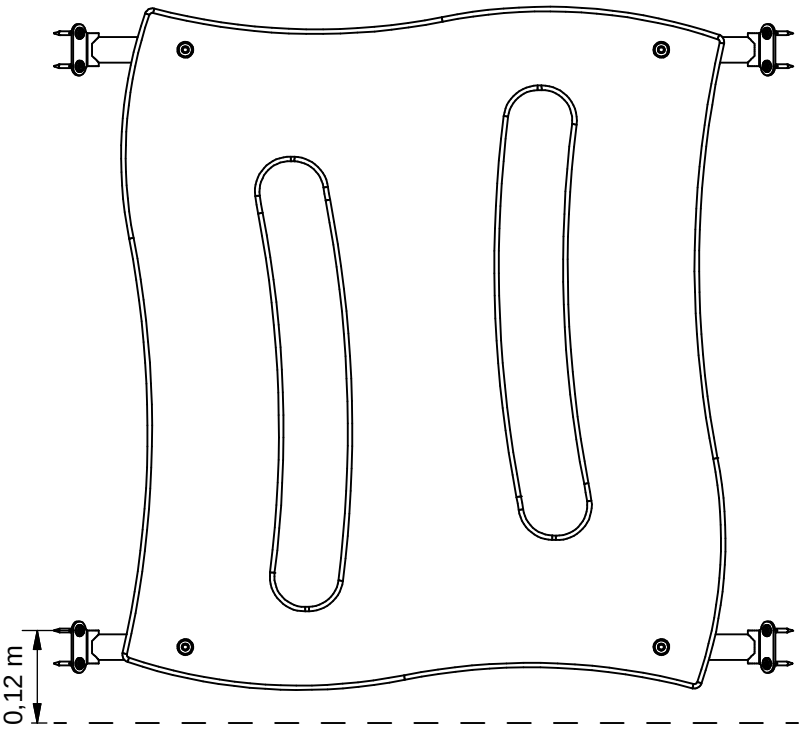

Bovenkant bordes
(Top platform)

Nr	#	Type	Progr.	Volgnr	Bew.	Rev.	Benaming	Opmerking
1	16	BSR	002	005	050		Schroef Assy	5 x 50 - RVS A2-70
2	4	BSR	023	010	040		Bolkopbout ISO 7380	M10 x 40 - RVS A2-70
3	16	BSR	036	005	015		Facet ring	M5 - RVS A2-70
4	4	KST	DOP	006	030		OPVULDOPJE	6 MM ROOD
5	4	KST	ROR	010	000		RING NYLON	M10 x 2.5 MM
6	4	KST	T33	010	000		ZADELRING	BUIS 33.7
7	1	OPE	VRB	002	030	G	WANDJE	SLEUF ROOD
8	2	SME	VRB	506	320	D	SYSTEEMBUIS	VRIJBUITER RVS

BOER SPEELTOESTELLEN

Benaming *Title*: WANDJE SLEUF

Opmerking *Comment*: ROOD

Datum *Date*: 17-2-2014

Tekening *Drawing*: MOD VRB HHT 011 A

Samenstelling module *Assembly module*

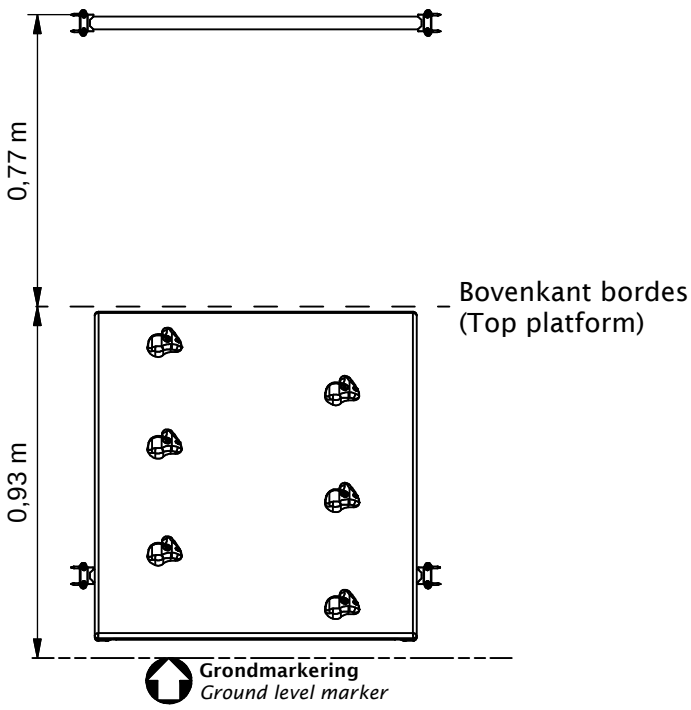

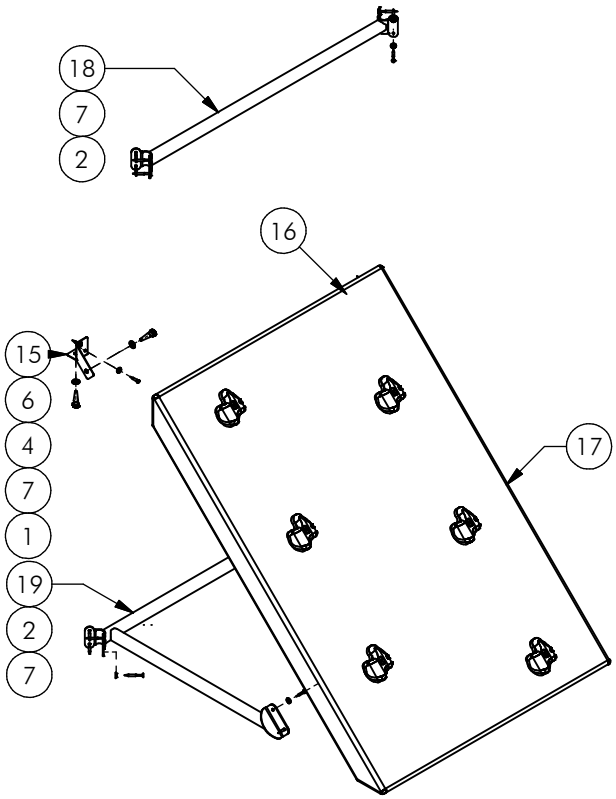

Nr	#	Type	Progr.	Volgnr	Bew.	Rev.	Benaming	Opmerking
1	14	BSR	002	005	030		Schroef Assy	5 x 30 - RVS A2-70
2	16	BSR	002	005	050		Schroef Assy	5 x 50 - RVS A2-70
3	6	BSR	011	010	020		DOPMOER	BORG RVS M10
4	4	BSR	022	010	040		Houtdraadbout	ø10 X 40 - RVS A2-70
5	6	BSR	024	010	050		Verzonken bout	M10 x 50 - RVS A2-70
6	10	BSR	030	010	002		SLUITRING	M10
7	24	BSR	036	005	015		Facet ring	M5 - RVS A2-70
8	4	KST	DOP	006	030		OPVULDOPJE	6 MM ROOD
9	1	KST	DOP	006	030		OPVULDOPJE	6 MM ROOD
10	1	KST	KNP	010	010		KLIMGREEP	GEEL
11	1	KST	KNP	010	050		KLIMGREEP	BLAUW
12	1	KST	KNP	010	070		KLIMGREEP	GROEN
13	2	KST	KNP	010	030		KLIMGREEP	ROOD
14	1	KST	KNP	010	040		KLIMGREEP	PAARS
15	1	OME	VRB	830	304		OPLOOP	BEUGEL LINKS
16	1	OME	VRB	831	304		OPLOOP	BEUGEL RECHTS
17	1	SHO	VRB	003	COA	B	OPLOOPPLAAT	VRIJBUITER
18	1	SME	VRB	505	320	D	SYSTEEMBUIS	VRIJBUITER RVS
19	1	SME	VRB	560	320	B	Steun	Oploop
20	2	KST	DOP	006	030		OPVULDOPJE	6 MM ROOD

BOER

Benaming *Title*: OPLOOP

Opmerking *Comment*: VRB

Datum *Date*: 25-9-2006

Tekening *Drawing*: MOD VRB HHT 027

Samenstelling module *Assembly module*

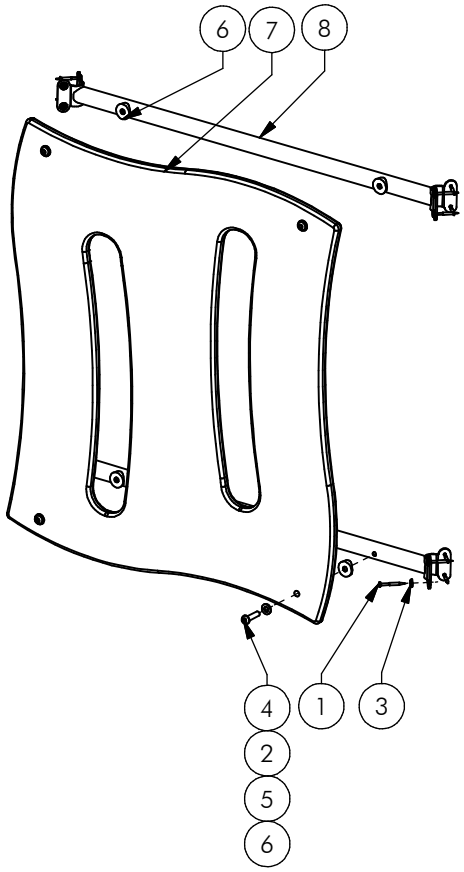

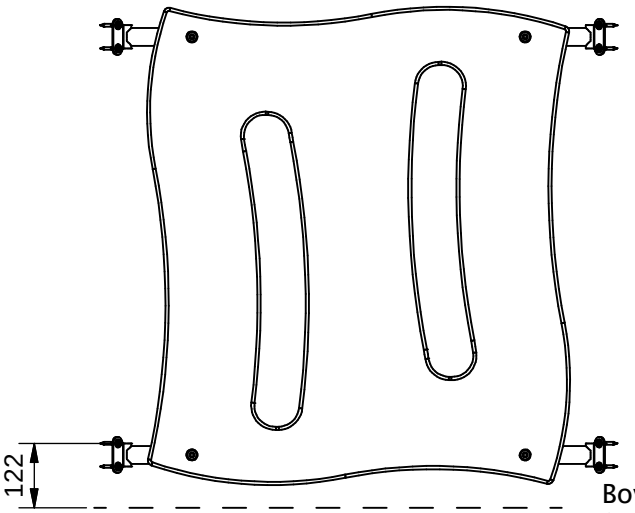

Bovenkant bordes
(Top platform)

Nr	#	Type	Progr.	Volgnr	Bew.	Rev.	Benaming	Opmerking
1	16	BSR	002	005	050		SCHROEF	5 x 50
2	4	BSR	023	010	040		Bolkopbout ISO 7380	M10 x 40 - RVS A2-70
3	16	BSR	036	005	015		Facet ring	M5 - RVS A2-70
4	4	KST	DOP	006	030		OPVULDOPJE	6 MM ROOD
5	4	KST	ROR	010	000		RING NYLON	M10 x 2.5 MM
6	4	KST	T33	010	000		ZADELRING	BUIS 33.7
7	1	OPE	VRB	002	050	G	WANDJE	SLEUF BLAUW
8	2	SME	VRB	506	320	D	SYSTEEMBUIS	VRIJBUITER RVS

BOER

Benaming *Title* WANDJE SLEUF

Opmerking *Comment* BLAUW

Datum *Date* 17-2-2014

Tekening *Drawing* MOD VRB HHT 059 A

Samenstelling module *Assembly module*

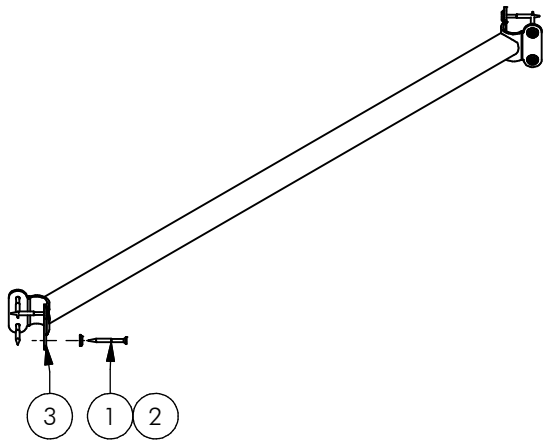

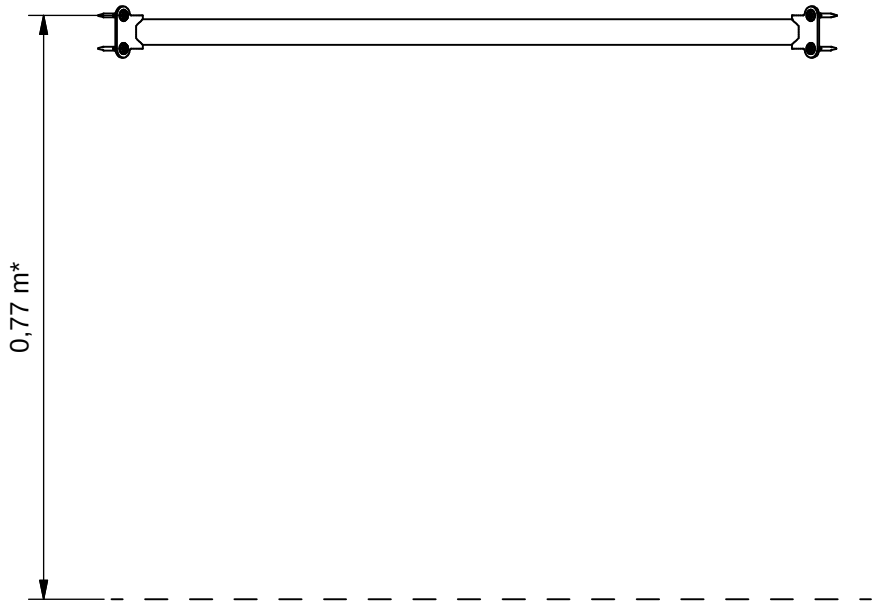

Bovenkant bordes
(Top platform)

*Gebruikt als railing
*Used as railing

Nr	#	Type	Progr.	Volgnr	Bew.	Rev.	Benaming	Opmerking
1	8	BSR	002	005	050		Schroef Assy	5 x 50 - RVS A2-70
2	8	BSR	036	005	015		Facet ring	M5 - RVS A2-70
3	1	SME	VRB	505	320	D	SYSTEEMBUIS	VRIJBUITER RVS

BOER SPEELTOESTELLEN

Benaming *Title* SYSTEEMBUIS

Opmerking *Comment* ENKEL

Datum *Date* 25-9-2006

Tekening *Drawing* MOD VRB HHT 075

Samenstelling module *Assembly module*

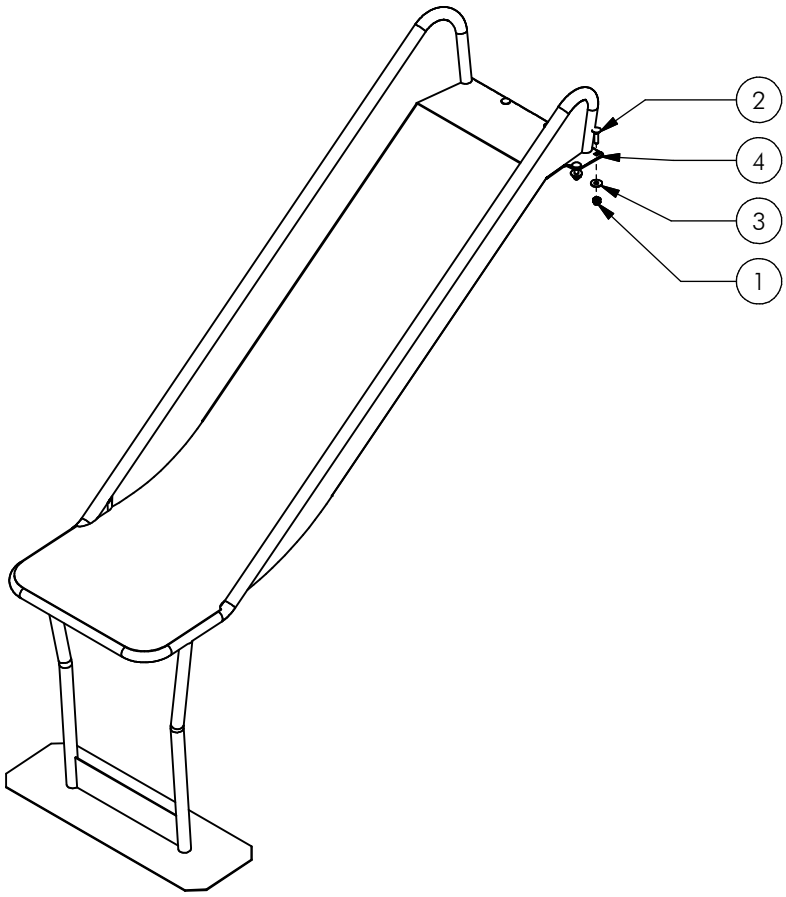

Let op: toestel bij voorkeur niet met de glijbaan op het zuiden plaatsen.

Attention: it is advisable not to oriënt playground equipment with the slide facing south

Nr	#	Type	Progr.	Volgnr	Bew.	Rev.	Benaming	Opmerking
1	6	BSR	011	010	020		DOPMOER	BORG RVS M10
2	6	BSR	026	010	040		Slotbout	M10 x 40 - RVS A2-70
3	6	BSR	035	010	030		Carrosserie ring	M10 - RVS A2-70
4	1	SME	VRB	611	320	B	Glijbaan	93 cm

BOER SPEELTOESTELLEN

Benaming *Title* Glijbaan 93 cm

Opmerking *Comment* Module HHT

Datum *Date* 17-5-2010

Tekening *Drawing* MOD VRB HHT 190

Samenstelling module *Assembly module*